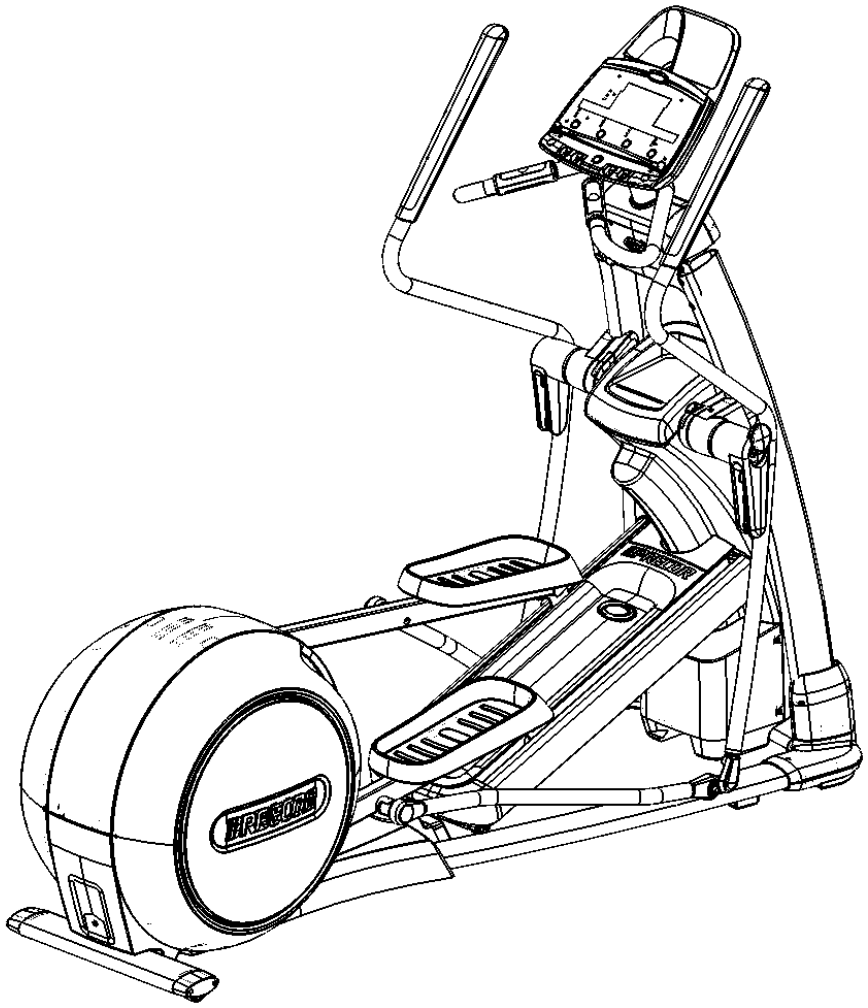

C576I	P/N : 39869-101	SUBREV : M03
DRAWN BY : C THOMSON	DATE : 30 SEP 2011	SHEET 1 OF 9

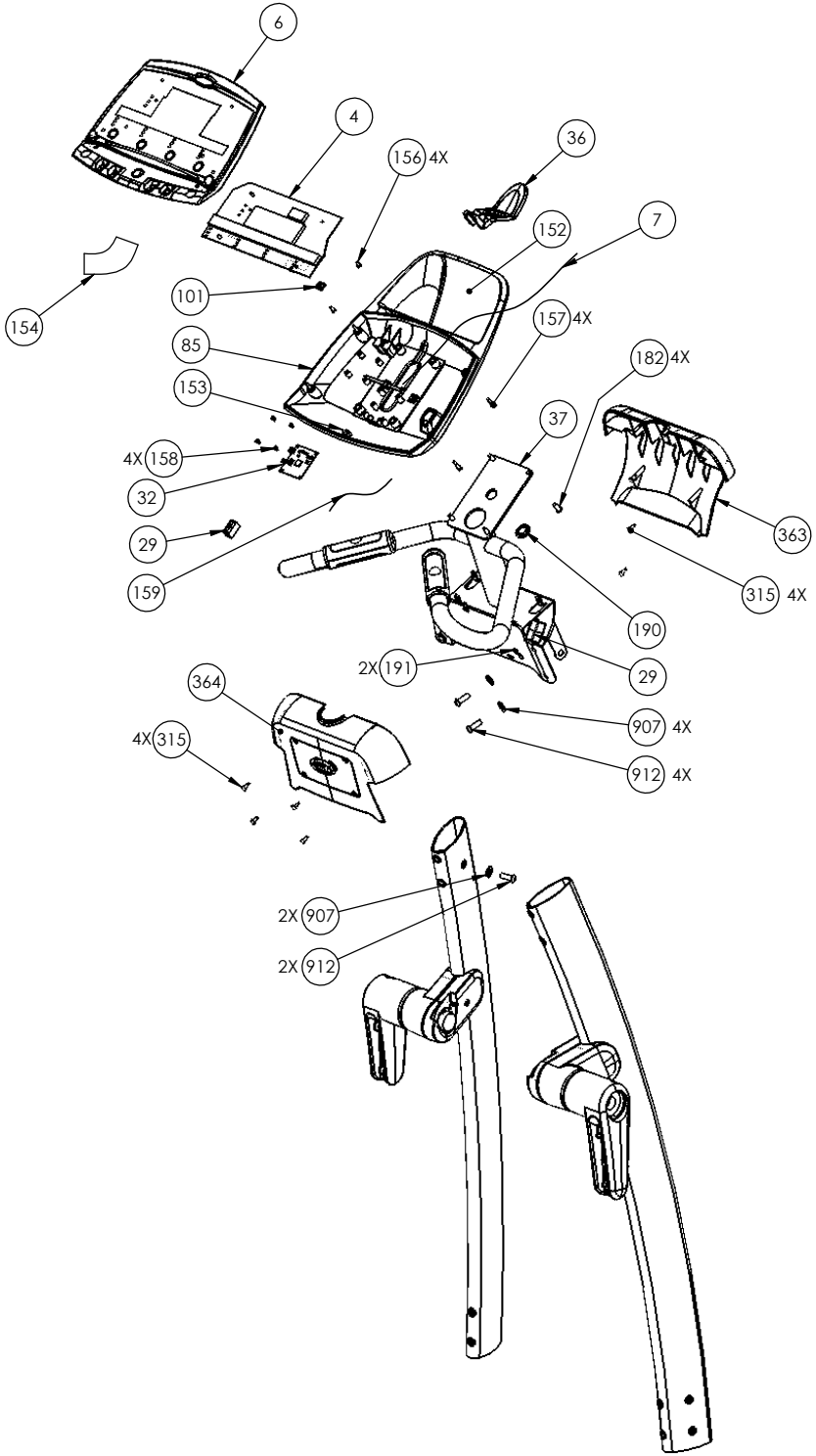

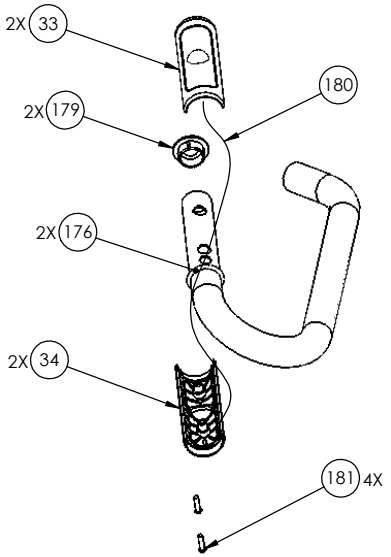

PAGE	OF	DWG. NO.	SUBREV
2	9	39869-101	M03

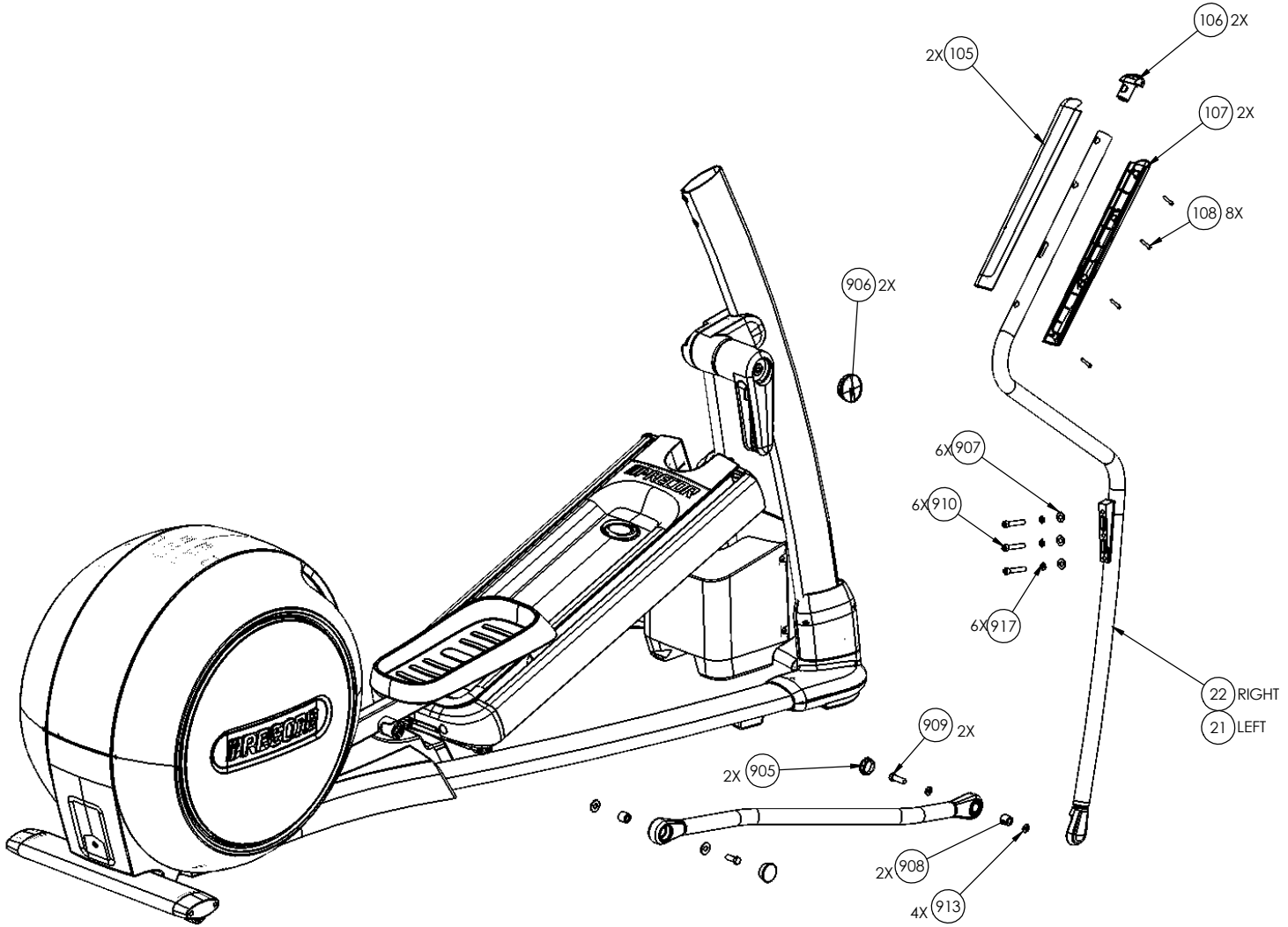

PAGE	OF	DWG. NO.	SUBREV
3	9	39869-101	M03

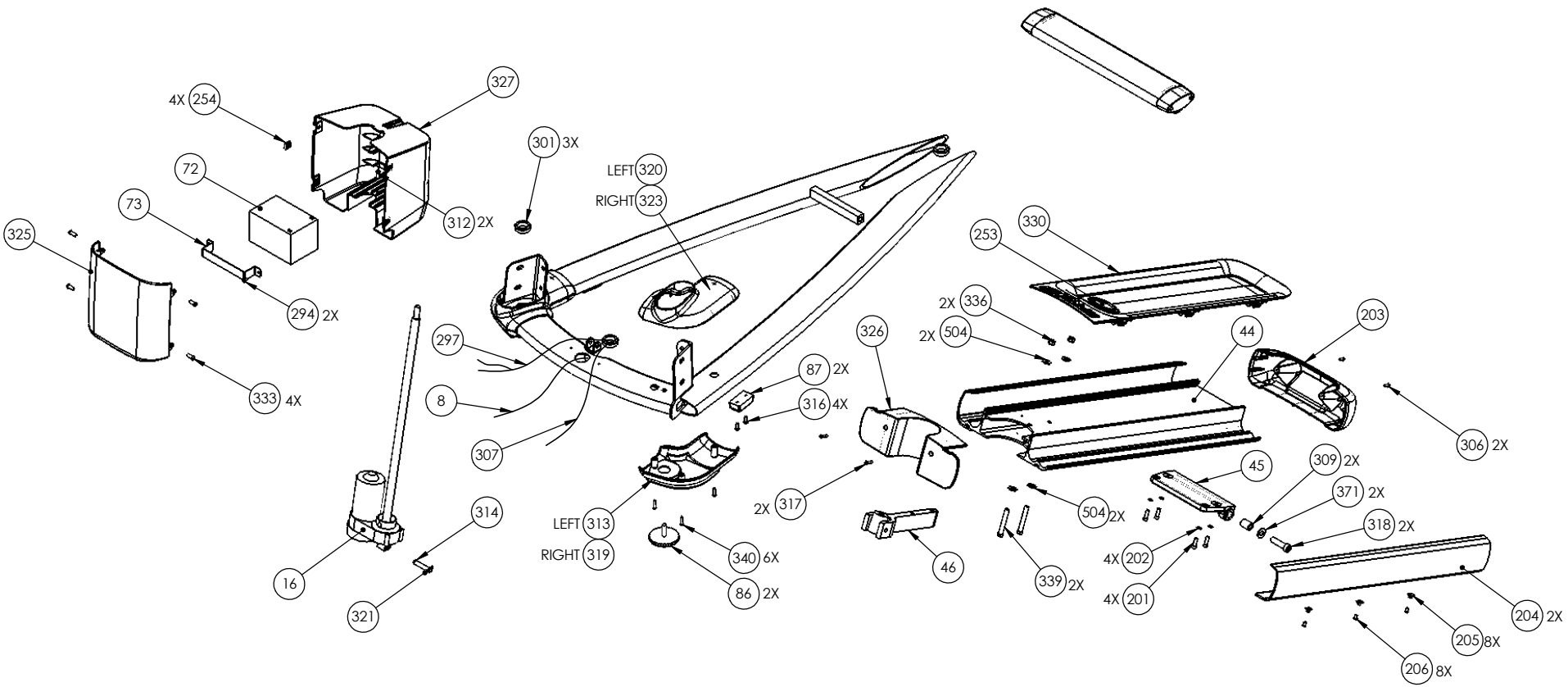

PAGE	OF	DWG. NO.	SUBREV
4	9	39869-101	M03

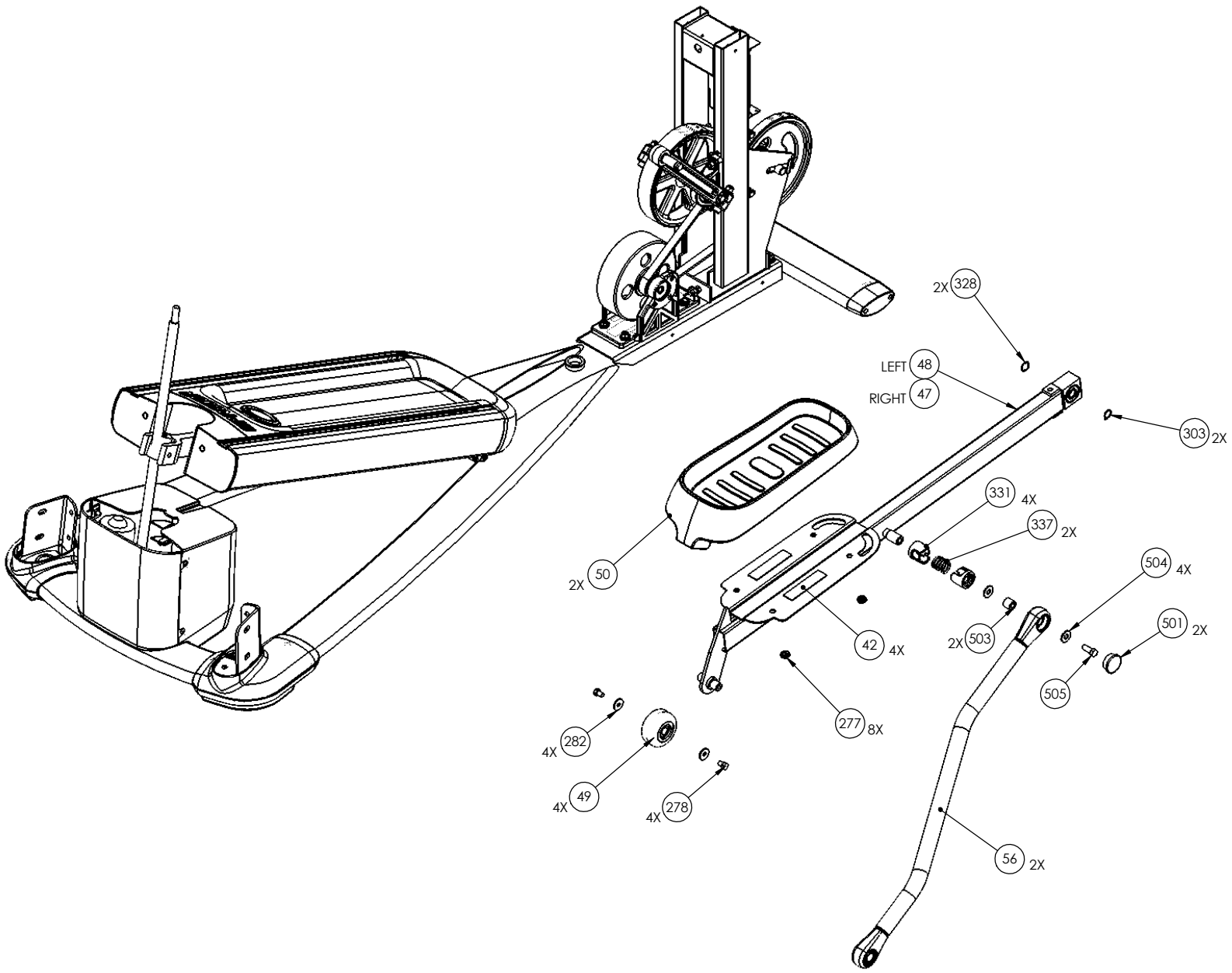

PAGE	OF	DWG. NO.	SUBREV
5	9	39869-101	M03

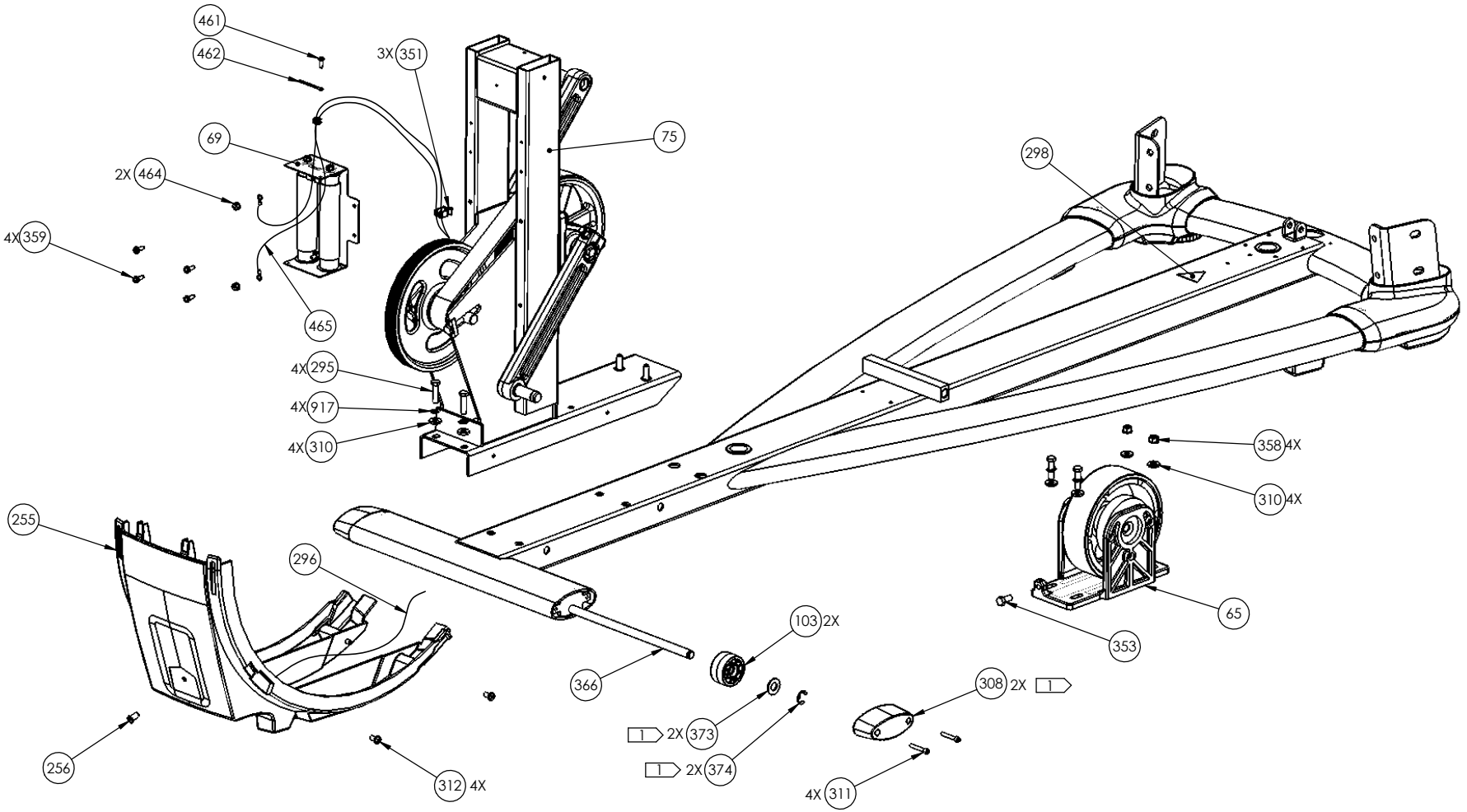

NOTES:

1 WHEN ORDERING BUBBLE #308, UNITS BUILT BEFORE 9/26/2011 MUST REMOVE WASHER AND E-RING (ITEMS 373 AND 374), BOTH SIDES, PRIOR TO INSTALLATION.

PAGE OF	DWG. NO.	SUBREV
6 9	39869-101	M03

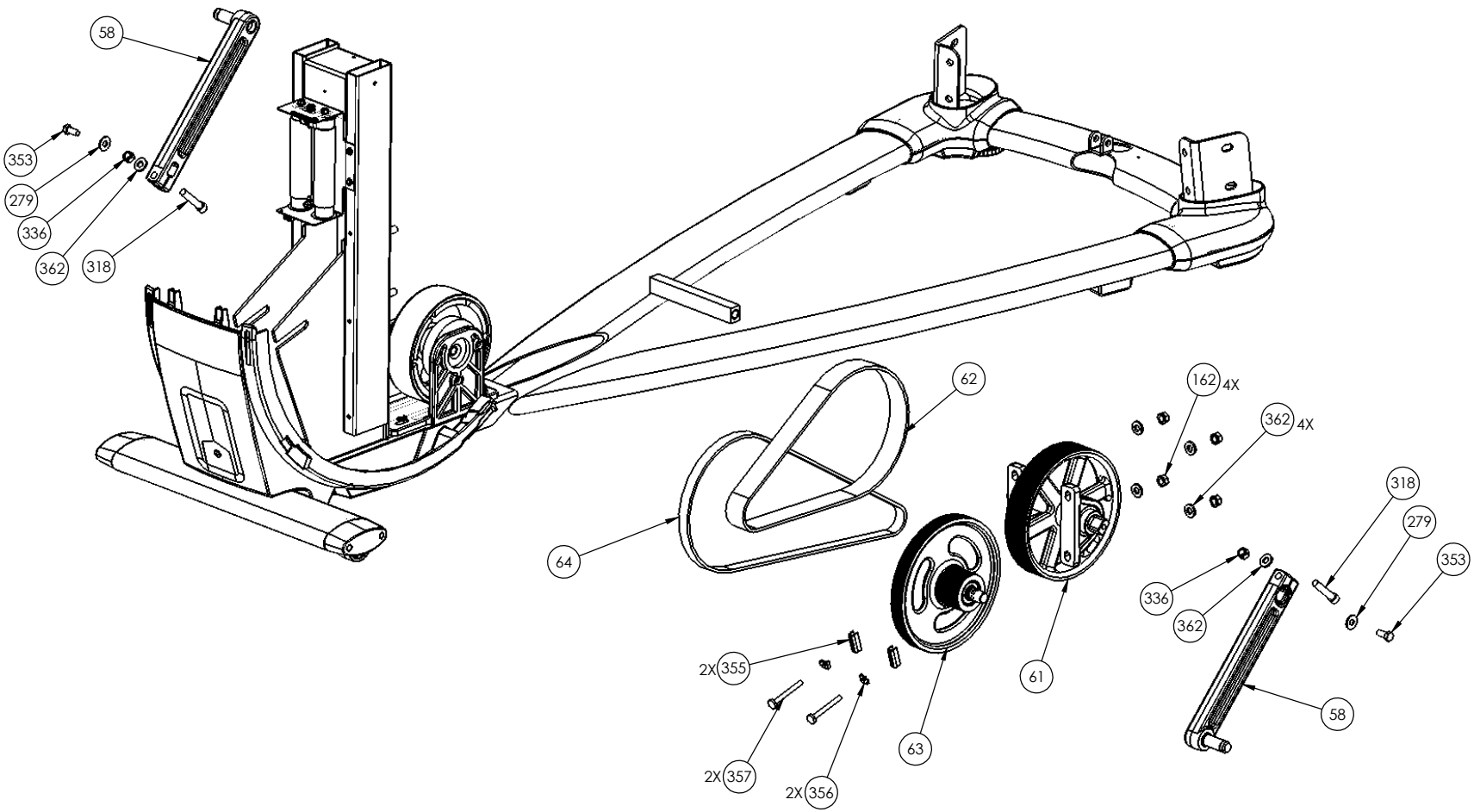

PAGE	OF	DWG. NO.	SUBREV
7	9	39869-101	M03

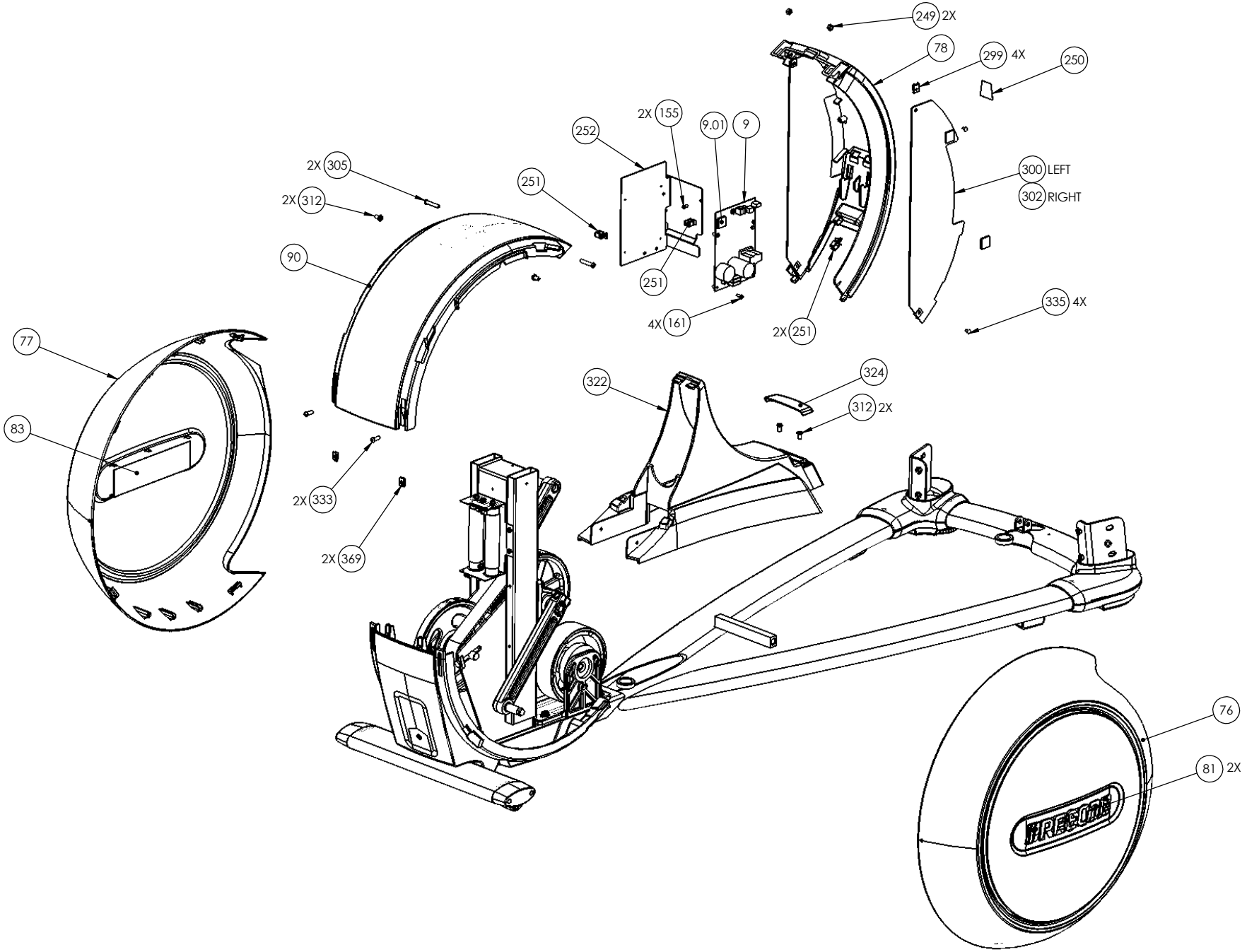

PAGE OF	DWG. NO.	SUBREV
8 9	39869-101	M03

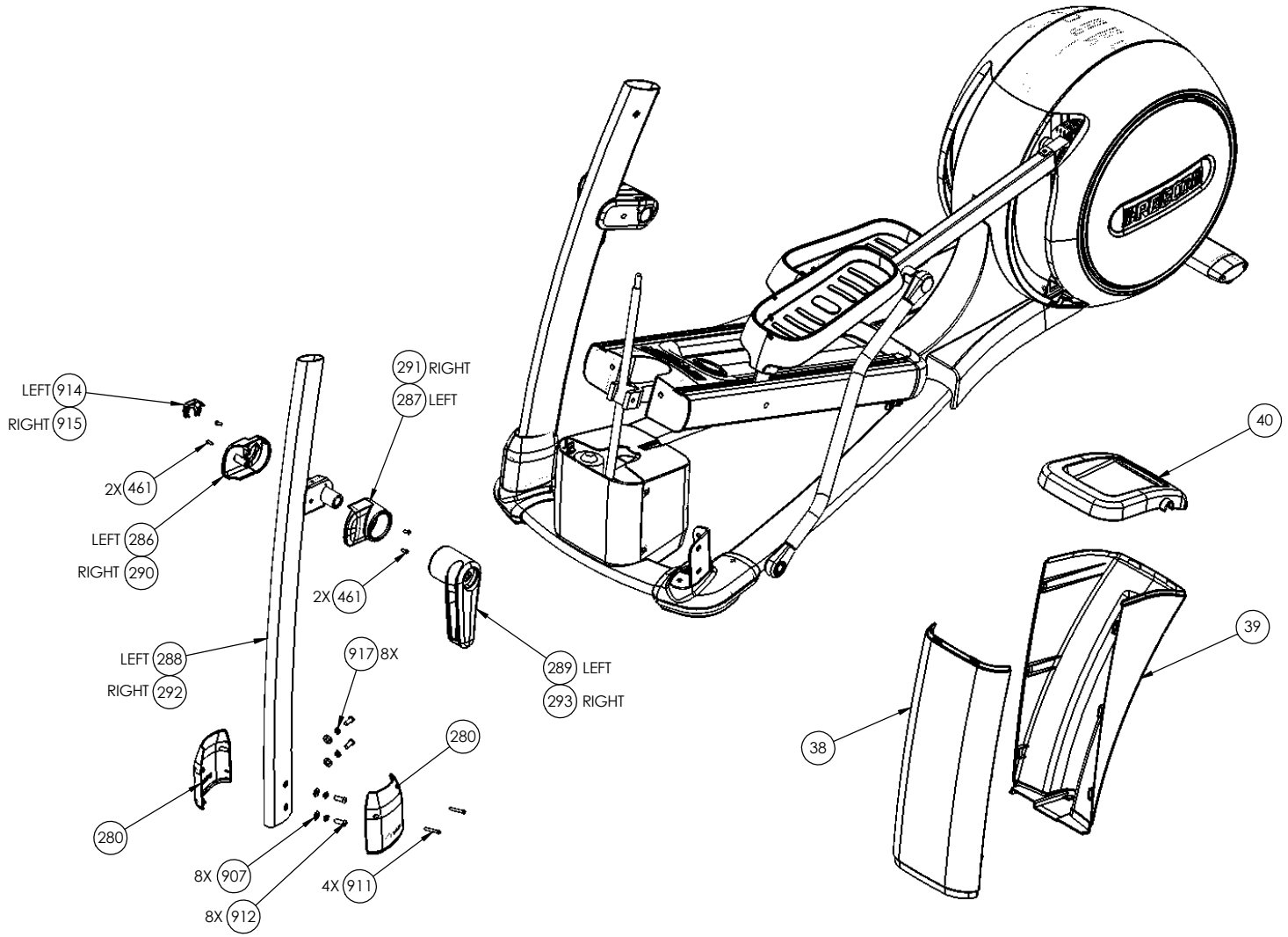

PAGE	OF	DWG. NO.	SUBREV
9	9	39869-101	M03