C B A

3 2 1

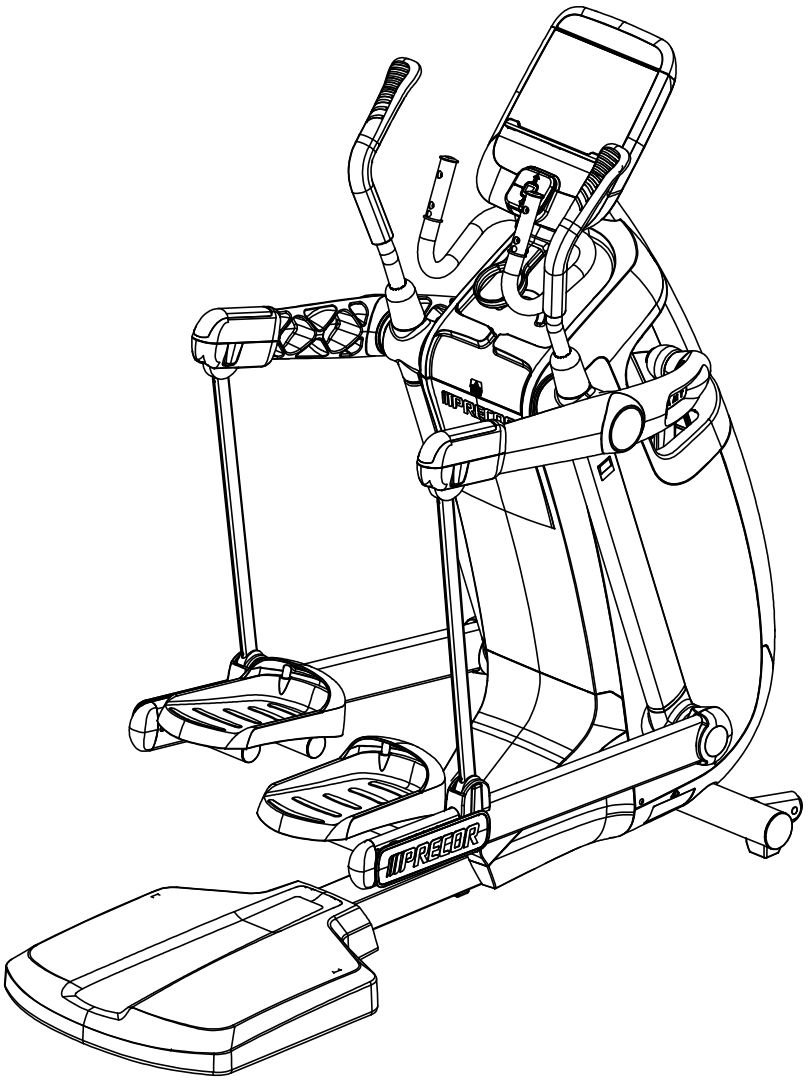

PRODUCT: C100I					PRECOR®	
DRWN BY	04.16.13	WDC	SIZE	PAGE OF	DWG. NO.	SUBREV
CS	04.08.13	BG	A	1 6	49388-101	AY03

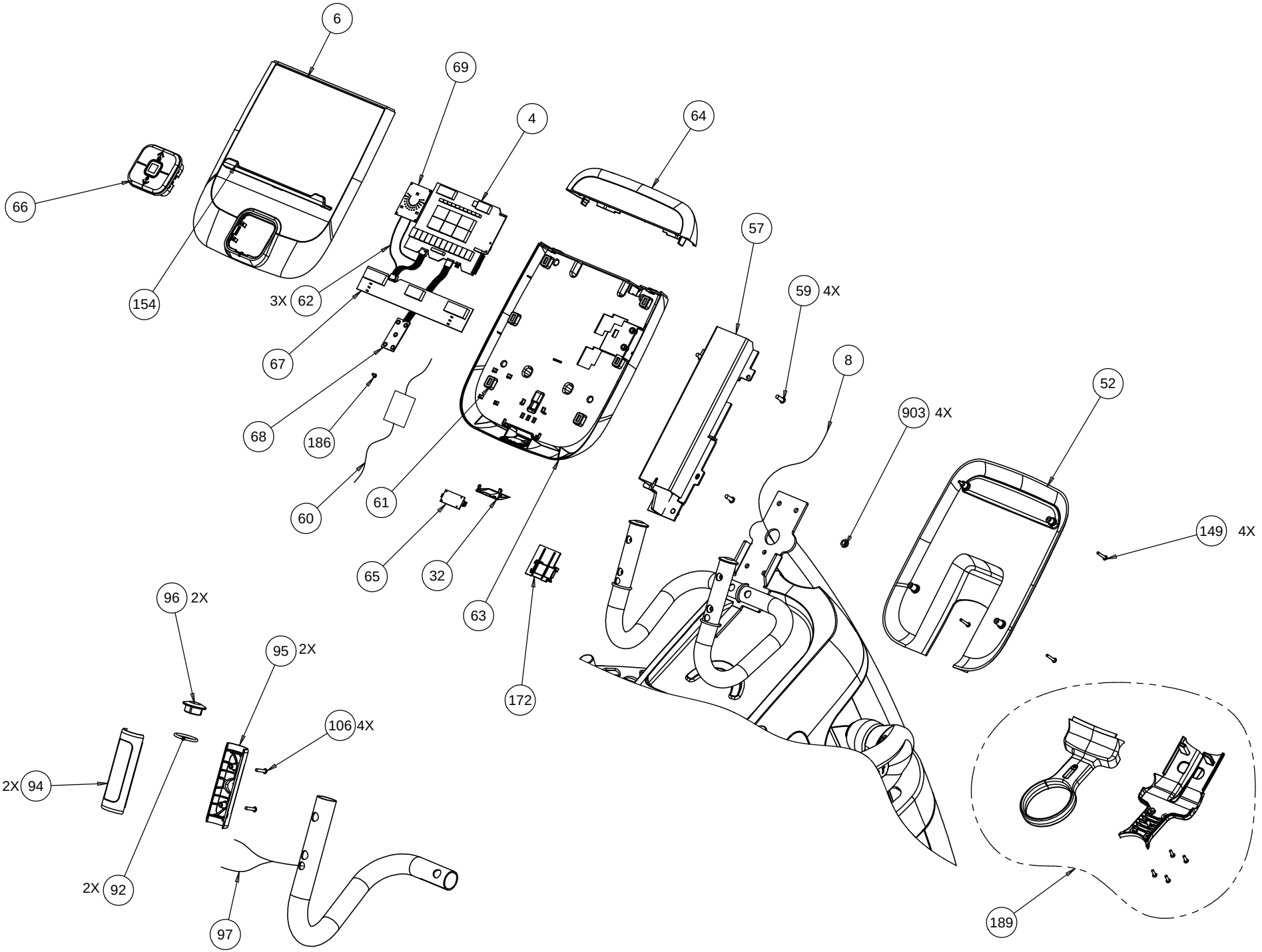

HHHR DETAIL

PAGE	OF	DWG. NO.	SUBREV
2	6	49388-101	AY03

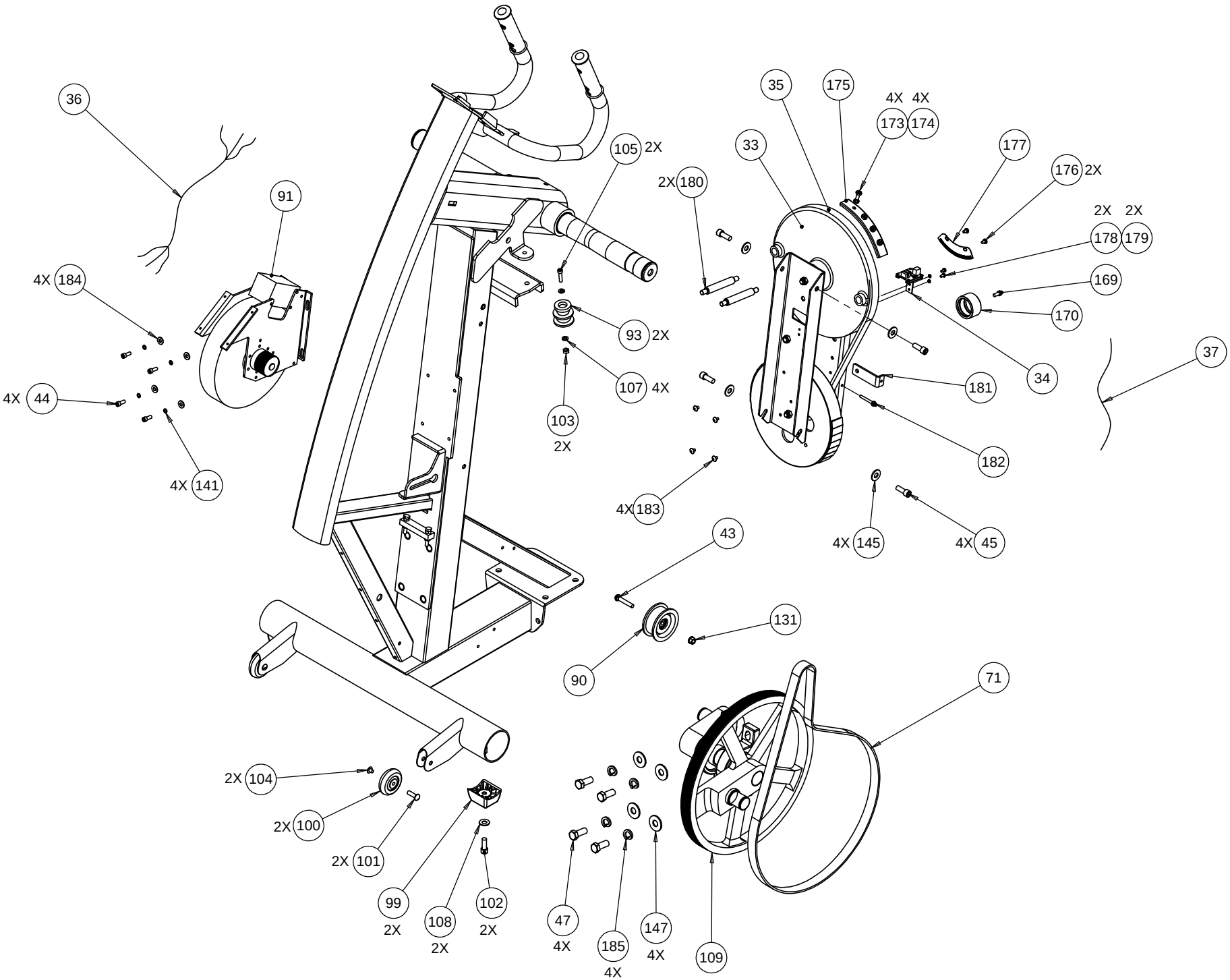

PAGE	OF	DWG. NO.	SUBREV
3	6	49388-101	AY03

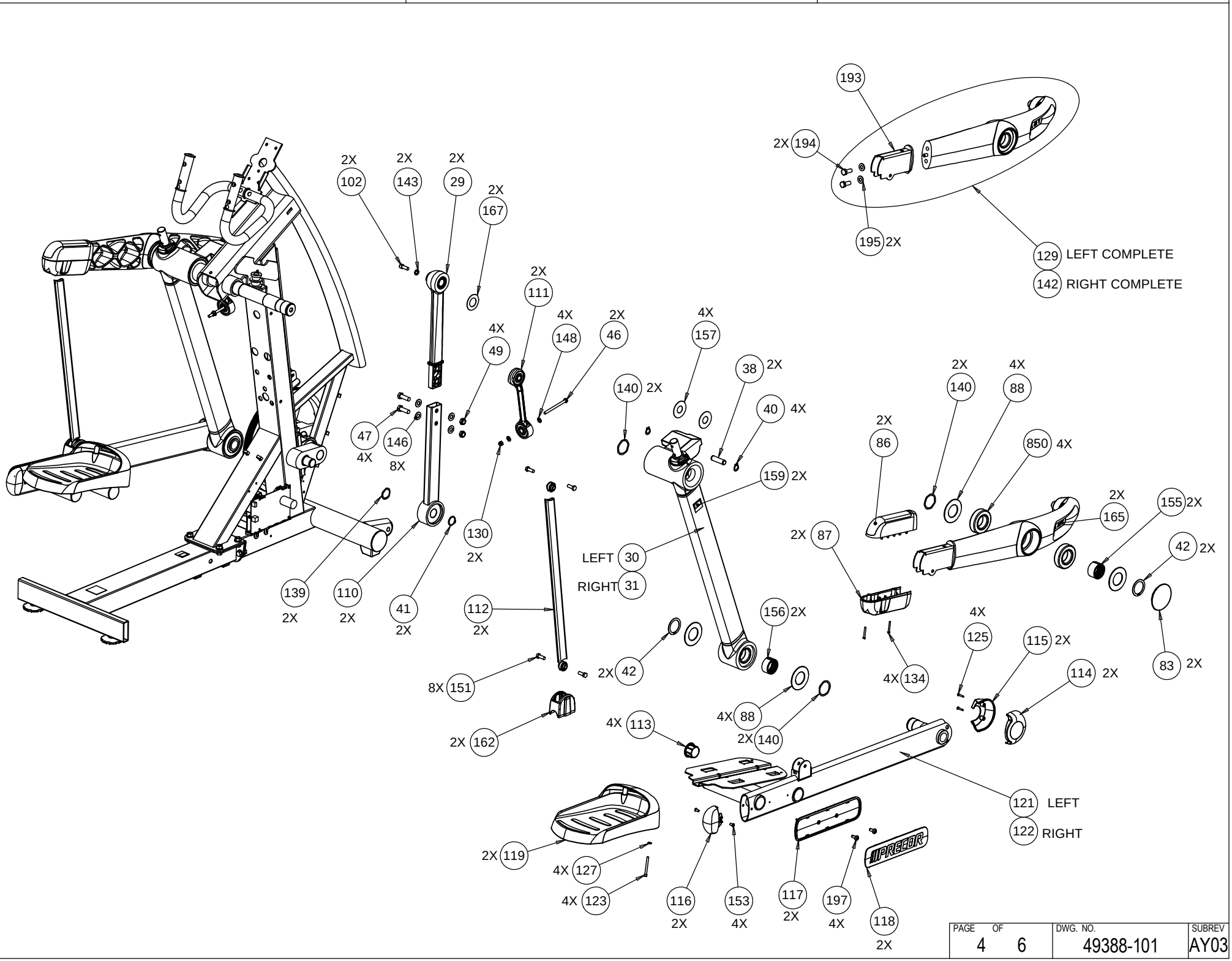

PAGE	OF	DWG. NO.	SUBREV
4	6	49388-101	AY03

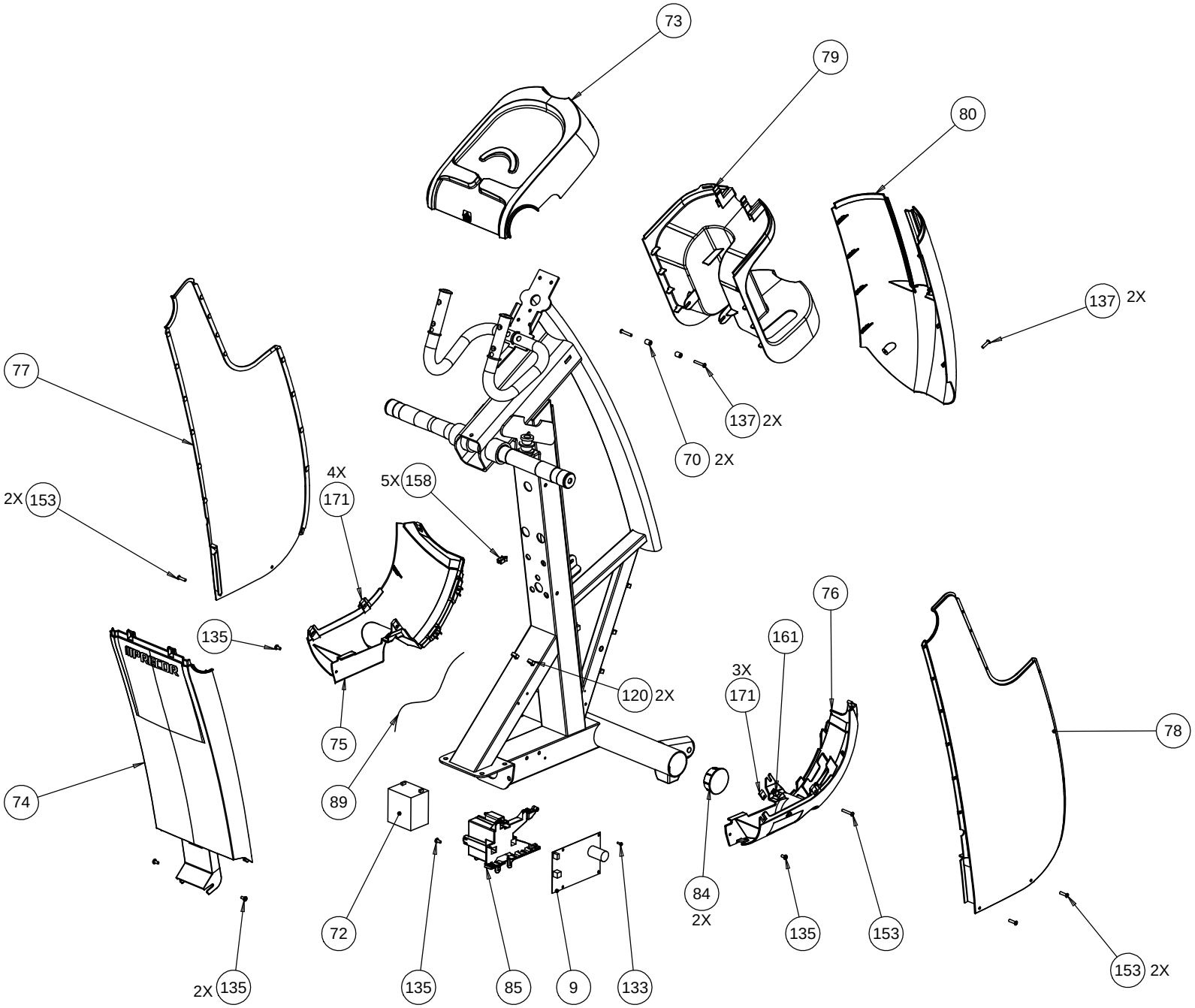

PAGE	OF	DWG. NO.	SUBREV
5	6	49388-101	AY03

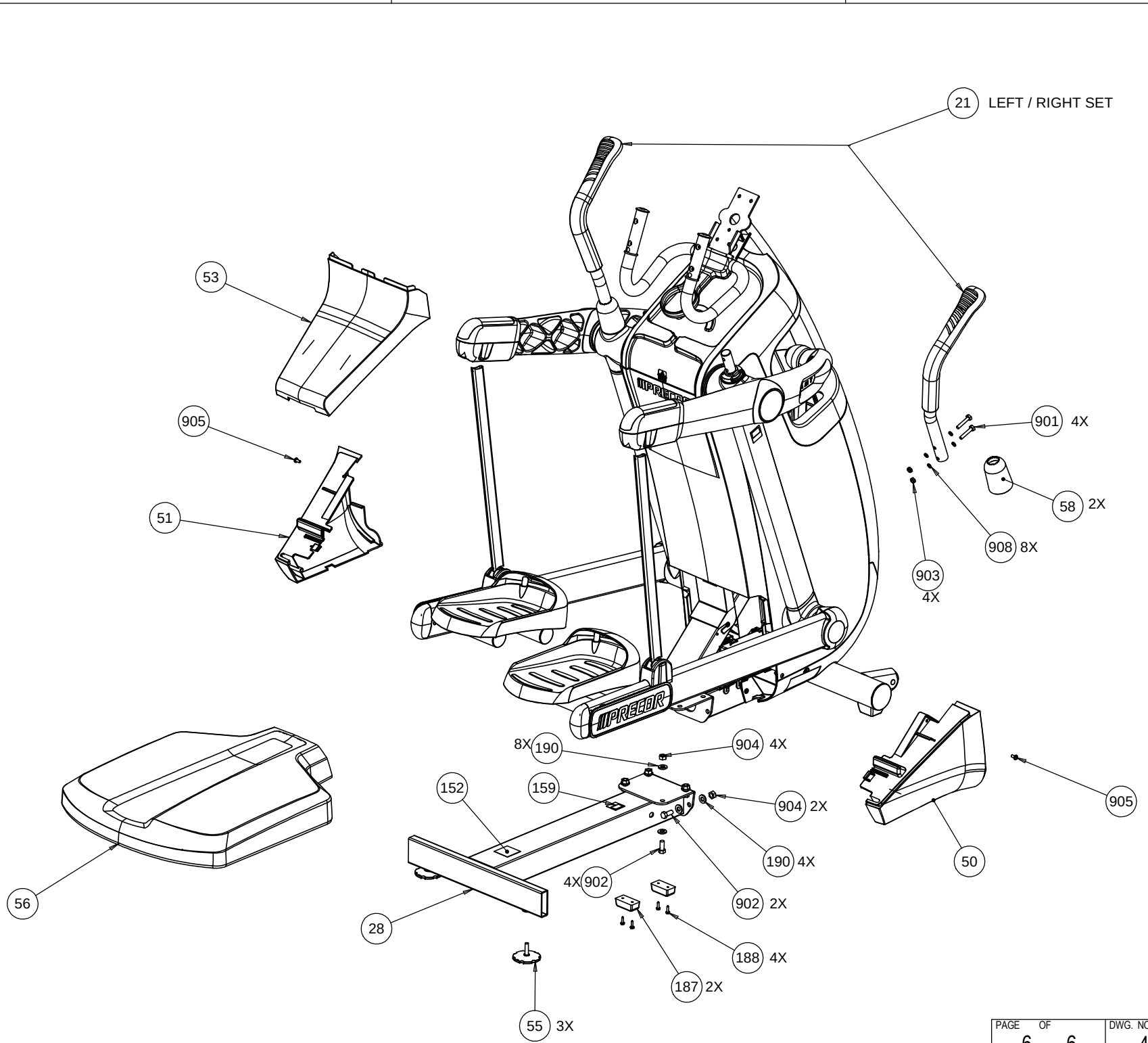

PAGE	OF	DWG. NO.	SUBREV
6	6	49388-101	AY03