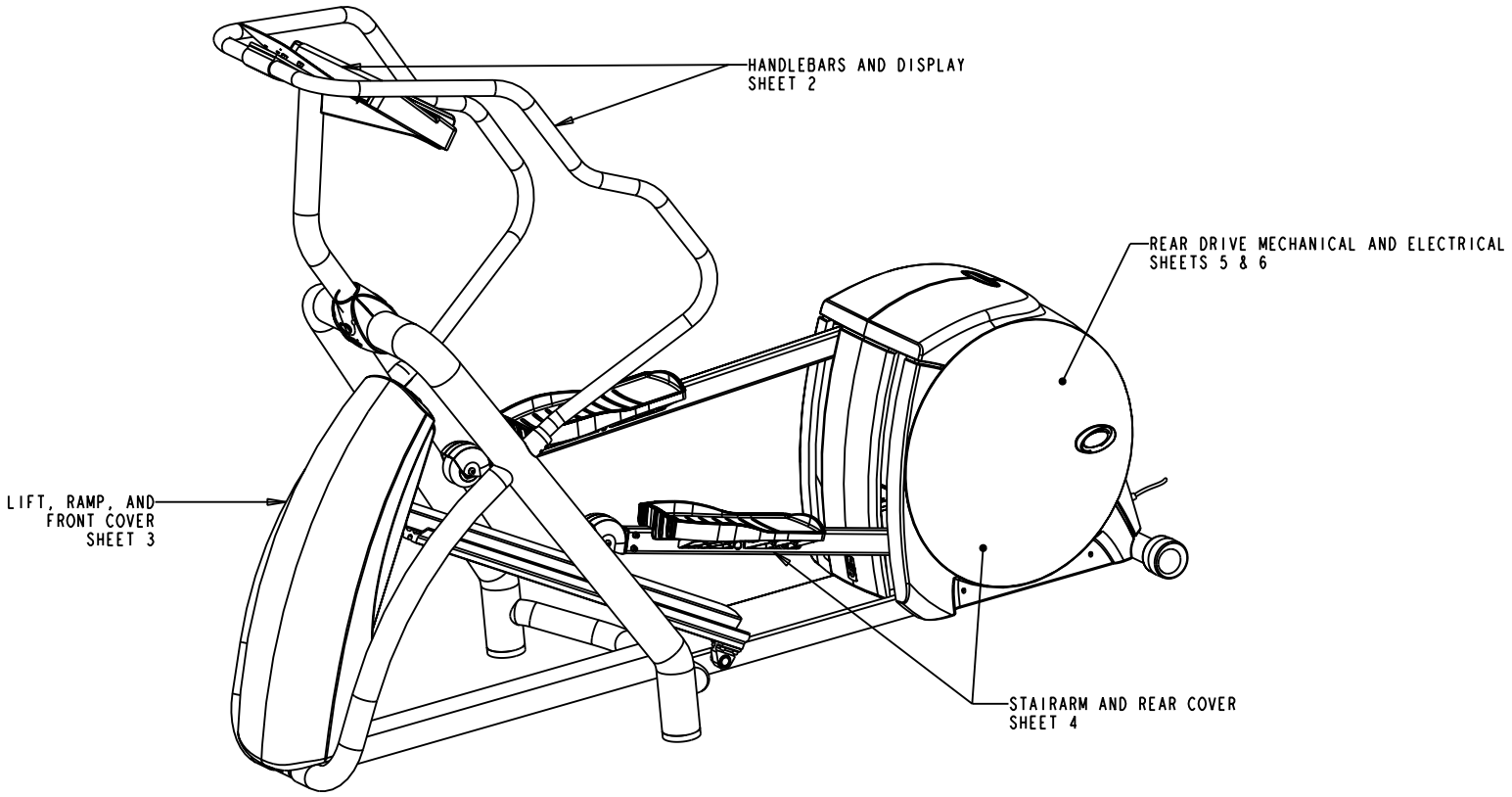

C546 EFX 120V & 240V	P/N 37949-101	REV: K01
DRAWN BY: M.HAMILTON	DATE: 04.15.04	SHEET 1 OF 6

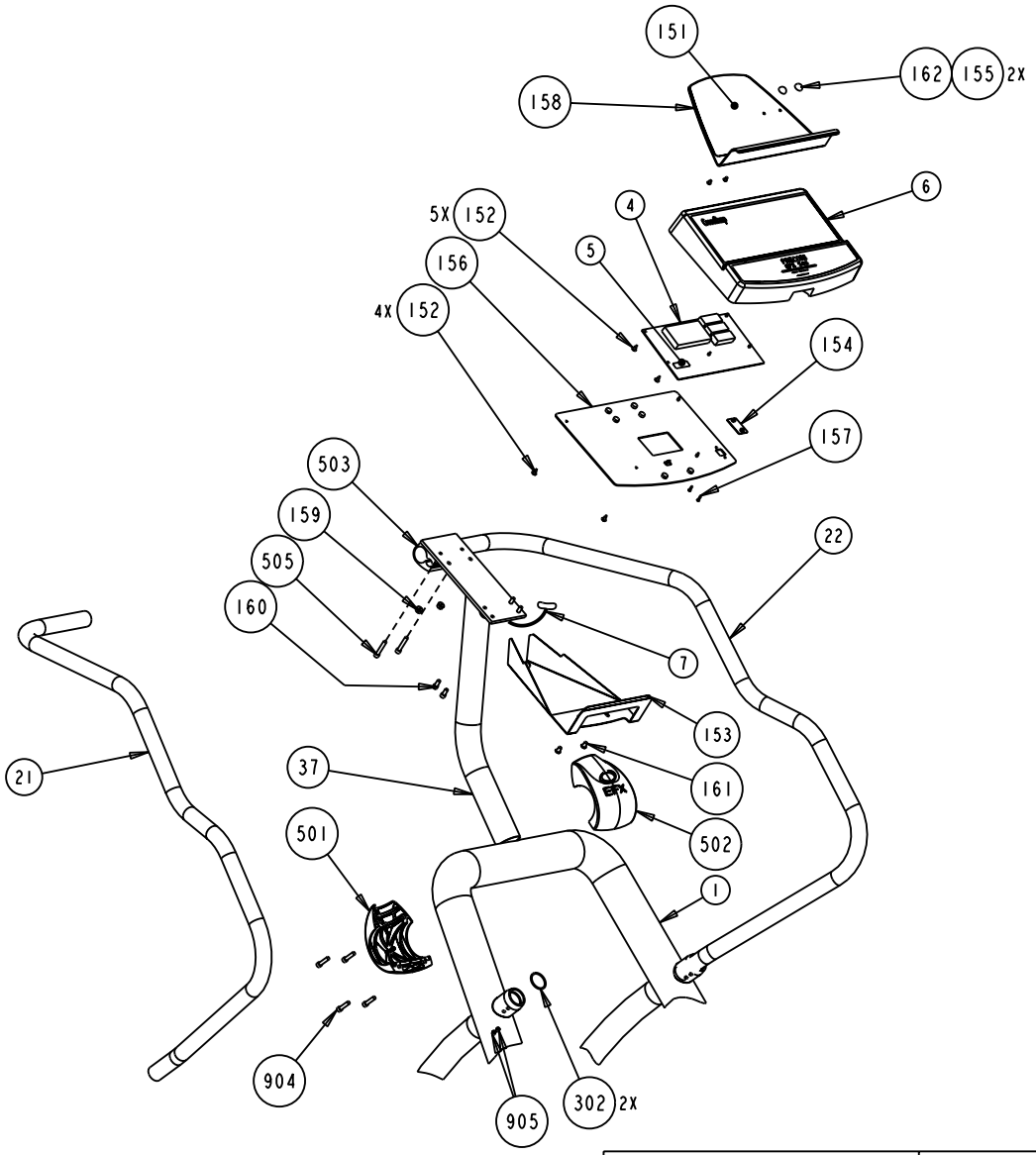

C546 EFX 120V & 240V	P/N 37949-101	REV: K01
DRAWN BY: M.HAMILTON	DATE: 04.15.04	SHEET 2 OF 6

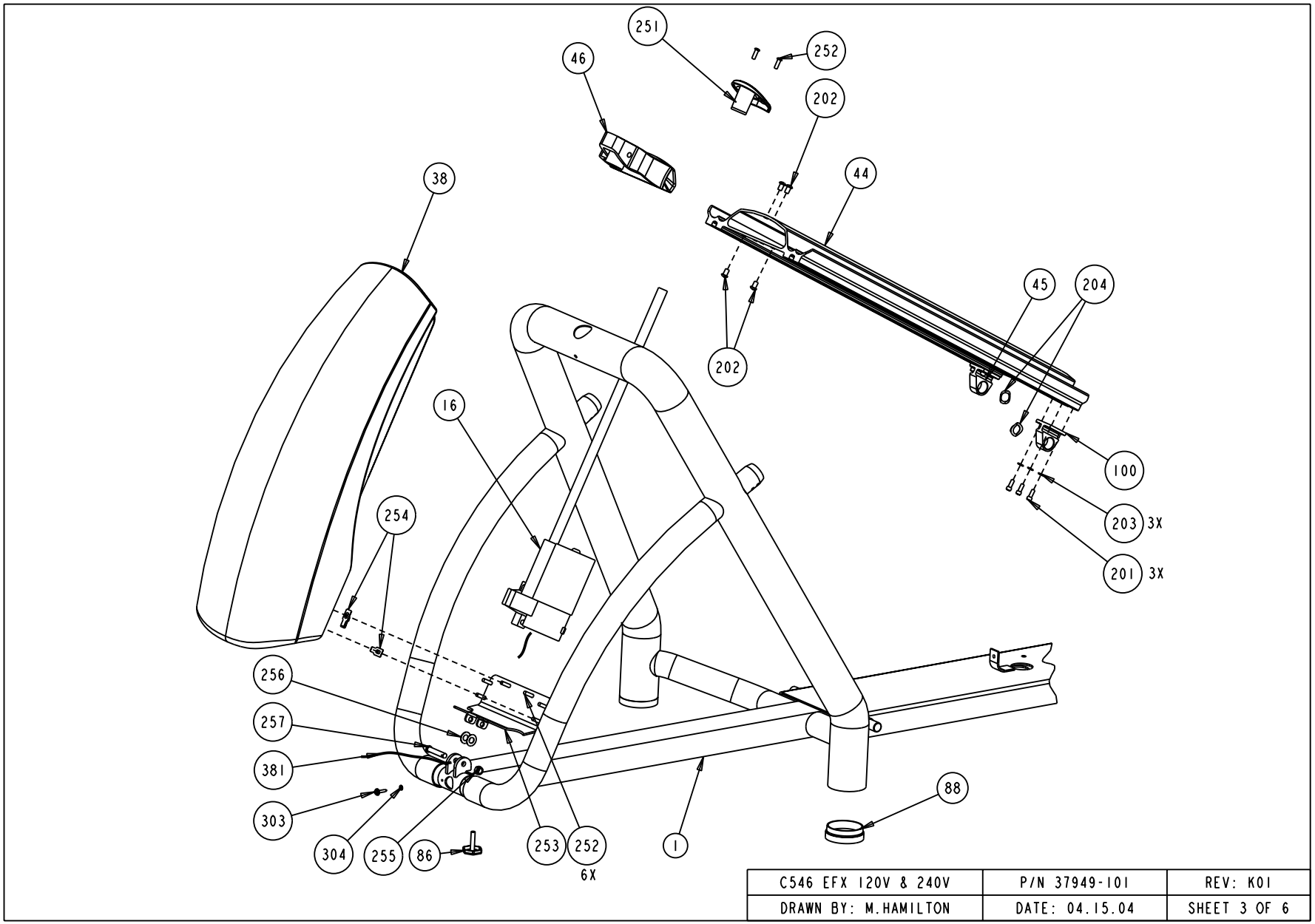

C546 EFX 120V & 240V	P/N 37949-101	REV: K01
DRAWN BY: M.HAMILTON	DATE: 04.15.04	SHEET 3 OF 6

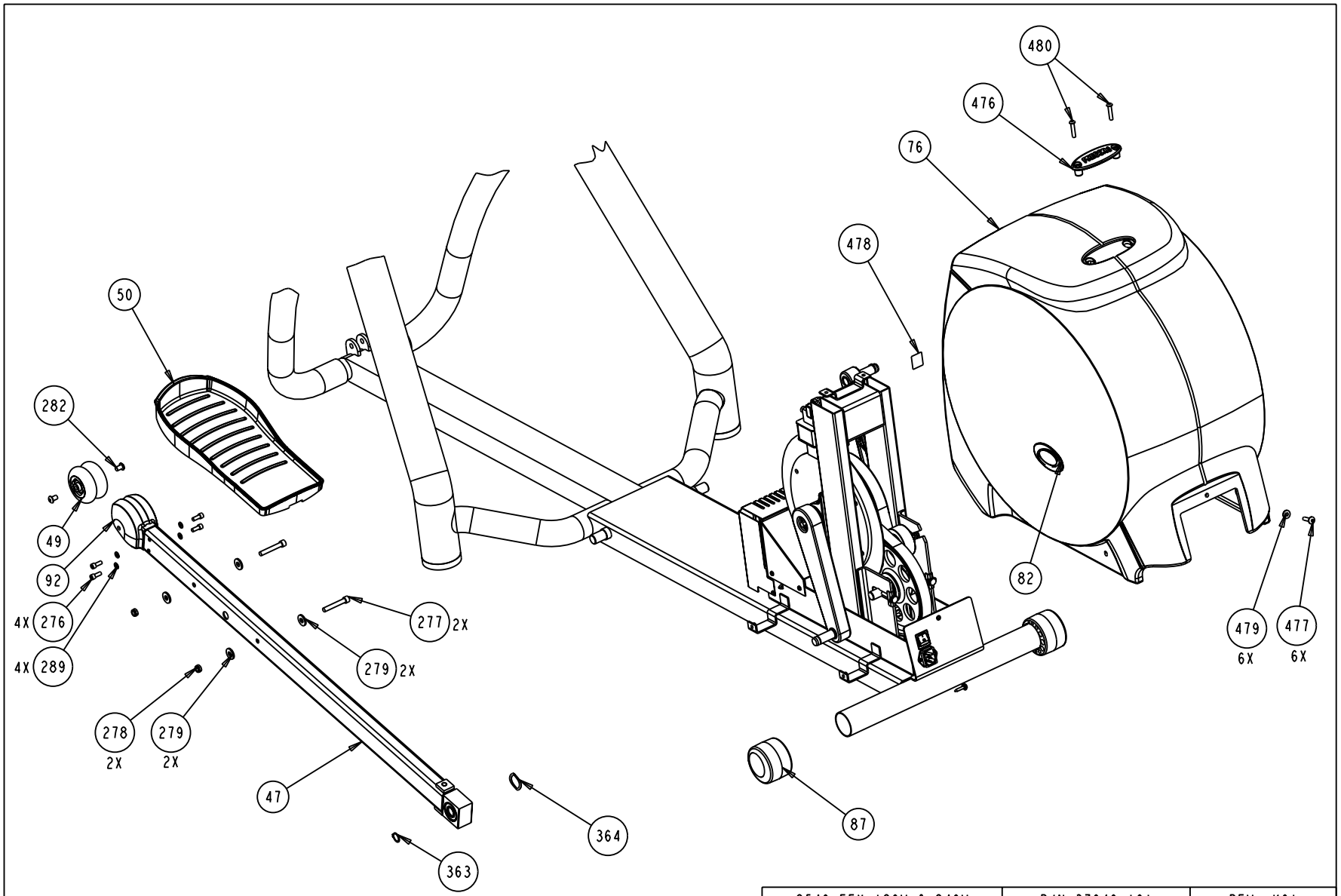

C546 EFX 120V & 240V	P/N 37949-101	REV: K01
DRAWN BY: M.HAMILTON	DATE: 04.15.04	SHEET 4 OF 6

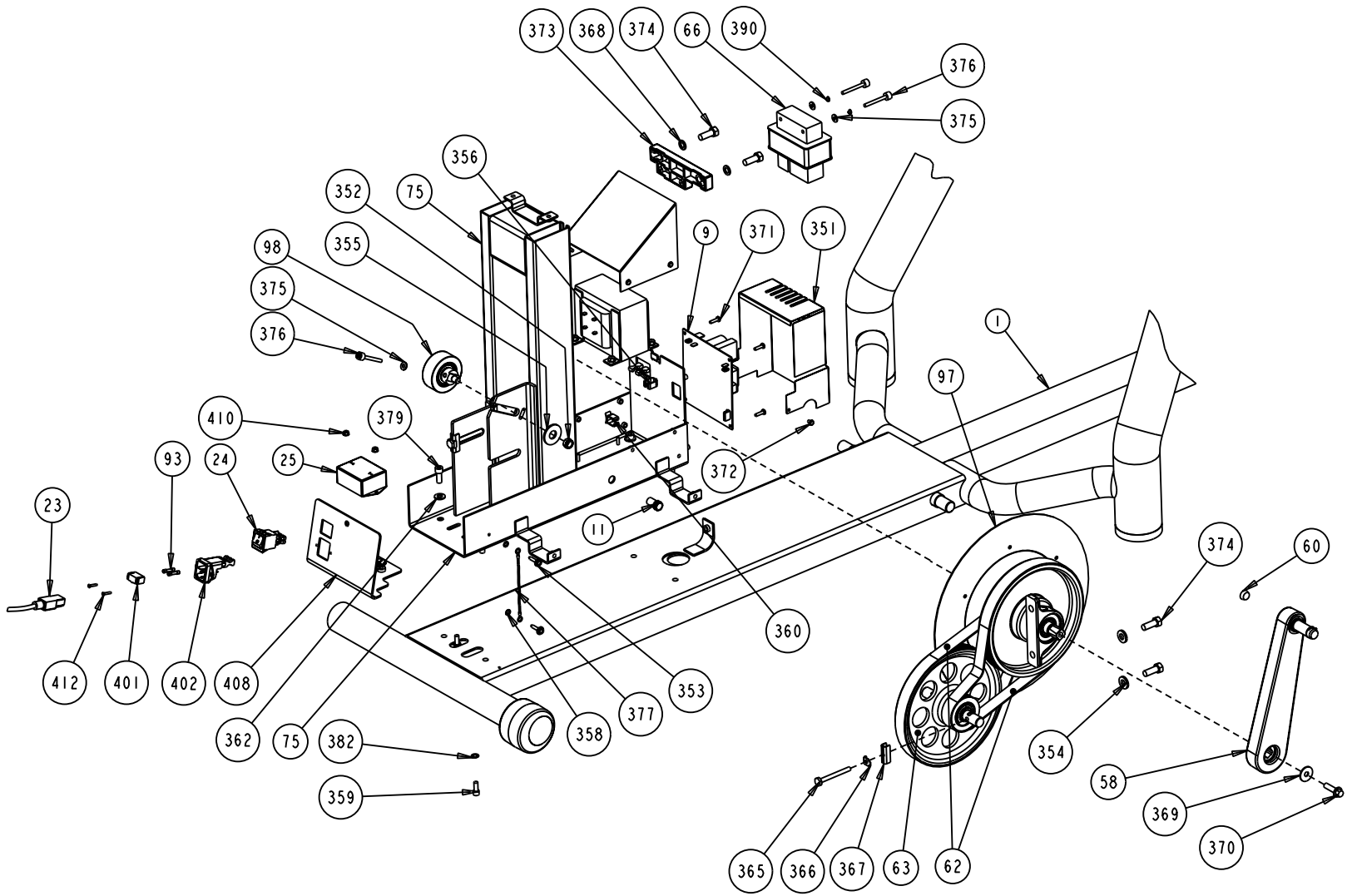

C546 EFX 120V & 240V	P/N 37949-101	REV: K01
DRAWN BY: M.HAMILTON	DATE: 04.15.04	SHEET 5 OF 6

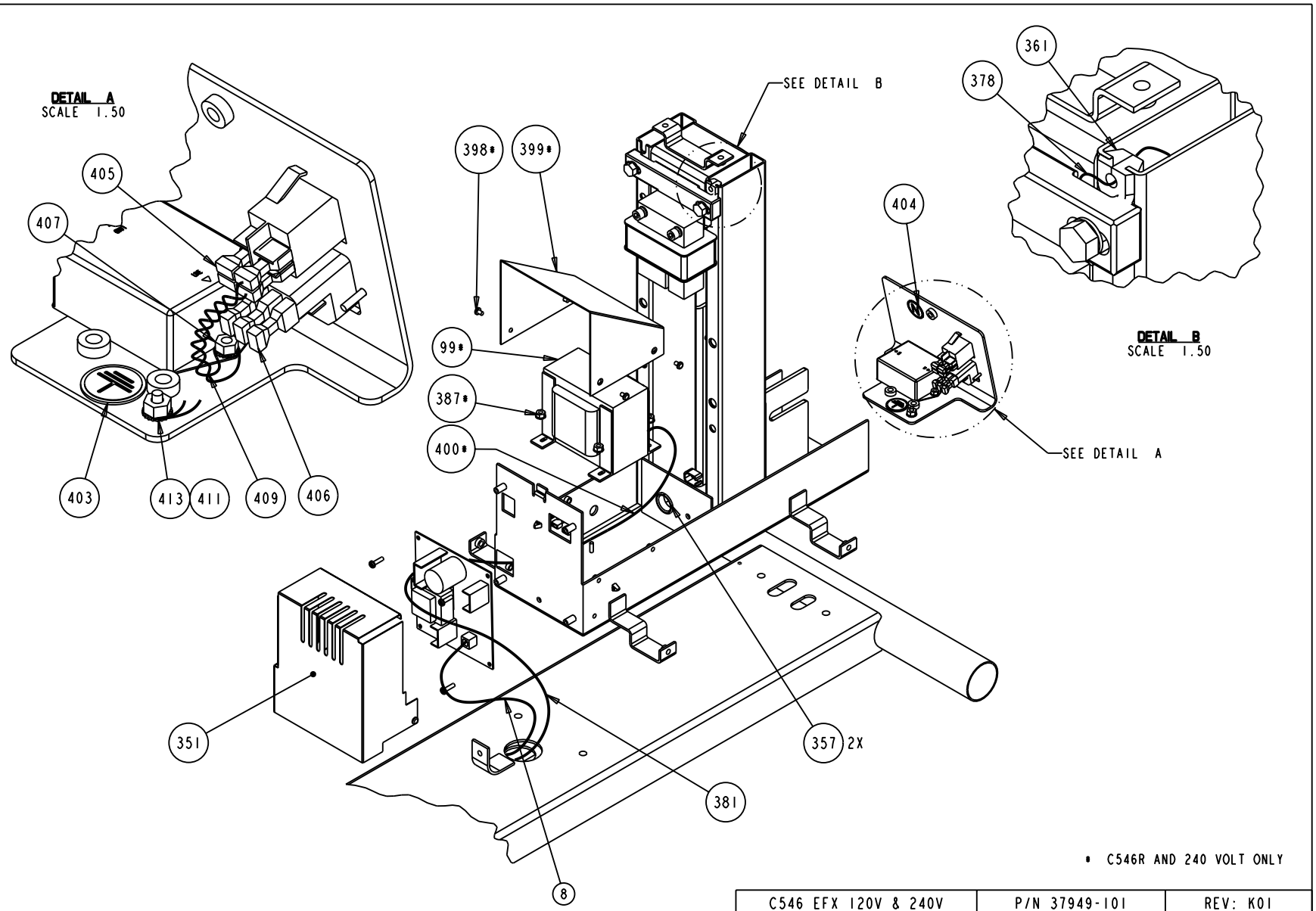

C546 EFX 120V & 240V	P/N 37949-101	REV: K01
DRAWN BY: M.HAMILTON	DATE: 04.15.04	SHEET 6 OF 6