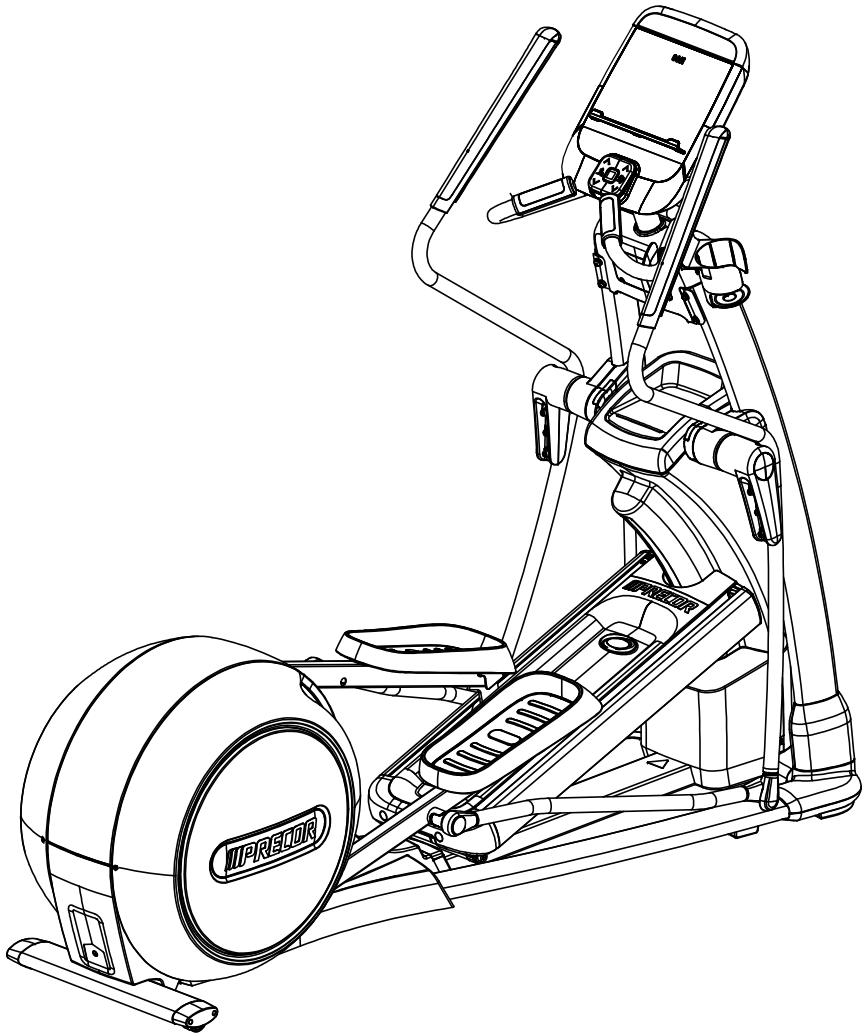

NOTES:

[1] WHEN ORDERING (308), UNITS BUILT BEFORE 9/26/2011 MUST REMOVE WASHER AND E-RING (NO LONGER SHOWN), BOTH SIDES, PRIOR TO INSTALLATION.

PRODUCT: C576I					PRECOR®	
DRWN BY	07.09.13	WDC	SIZE	PAGE OF	DWG. NO.	SUBREV
CS	06.18.13	BG	A	1 9	49031-101	AB

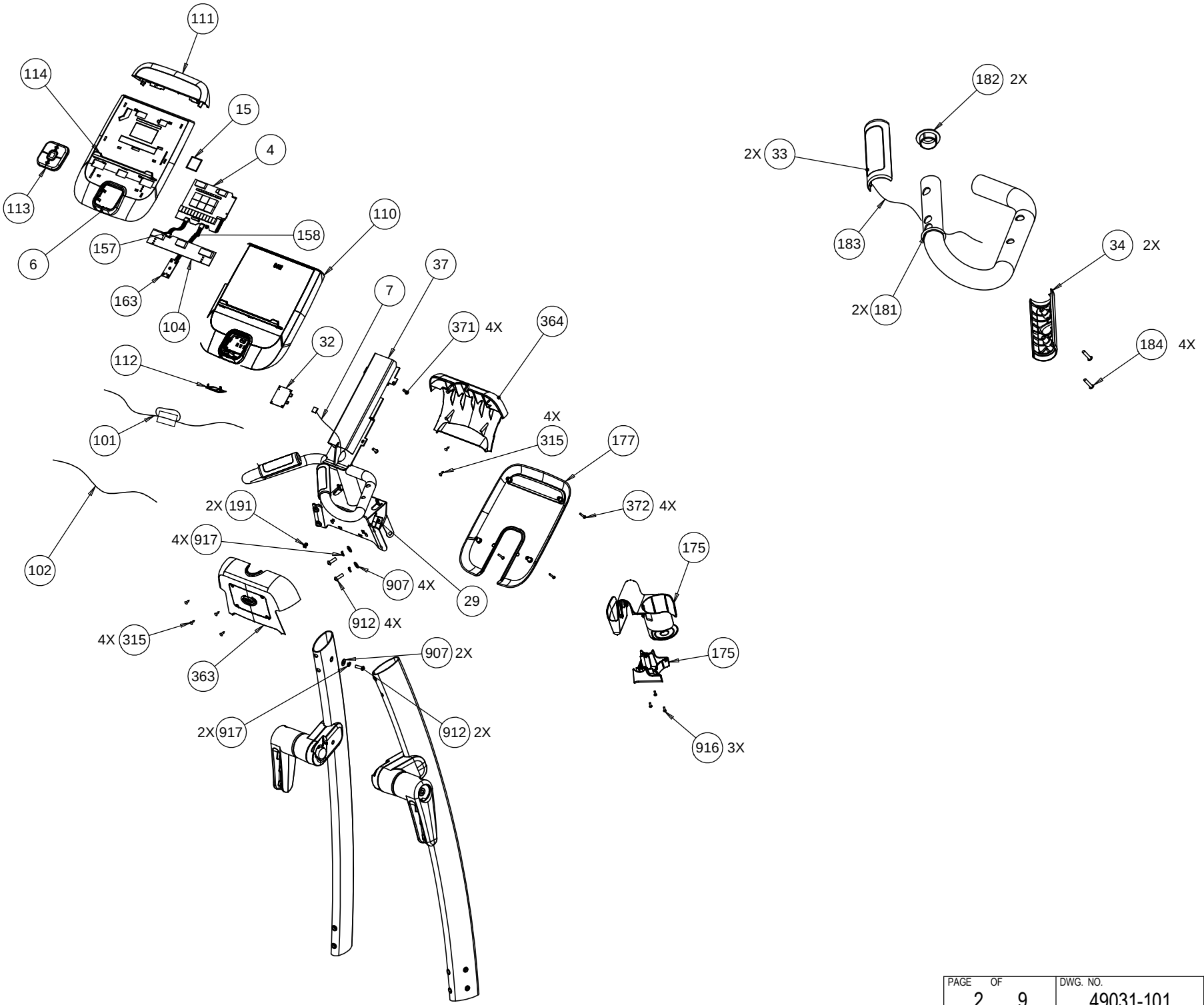

PAGE	OF	DWG. NO.	SUBREV
2	9	49031-101	AB

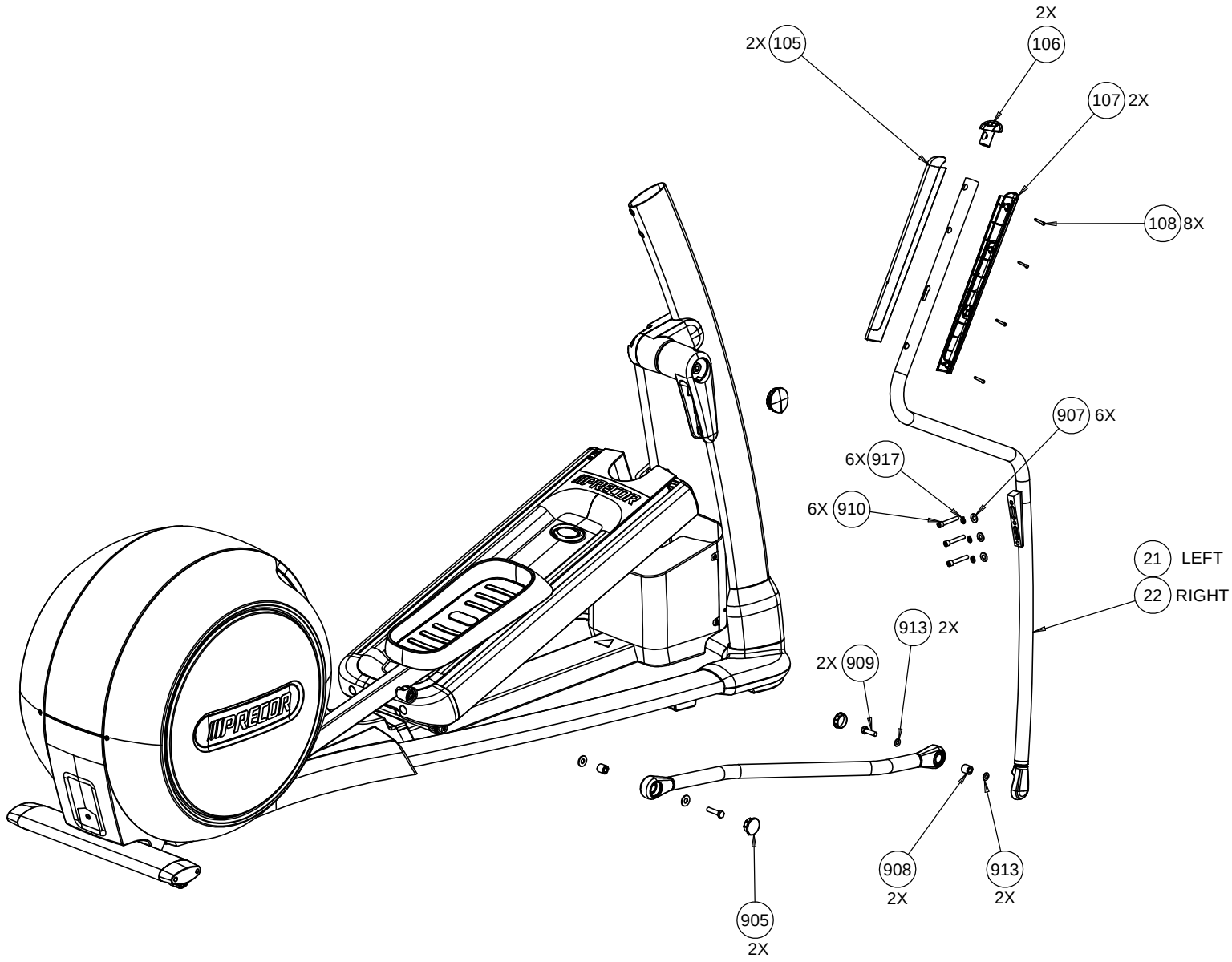

PAGE	OF	DWG. NO.	SUBREV
3	9	49031-101	AB

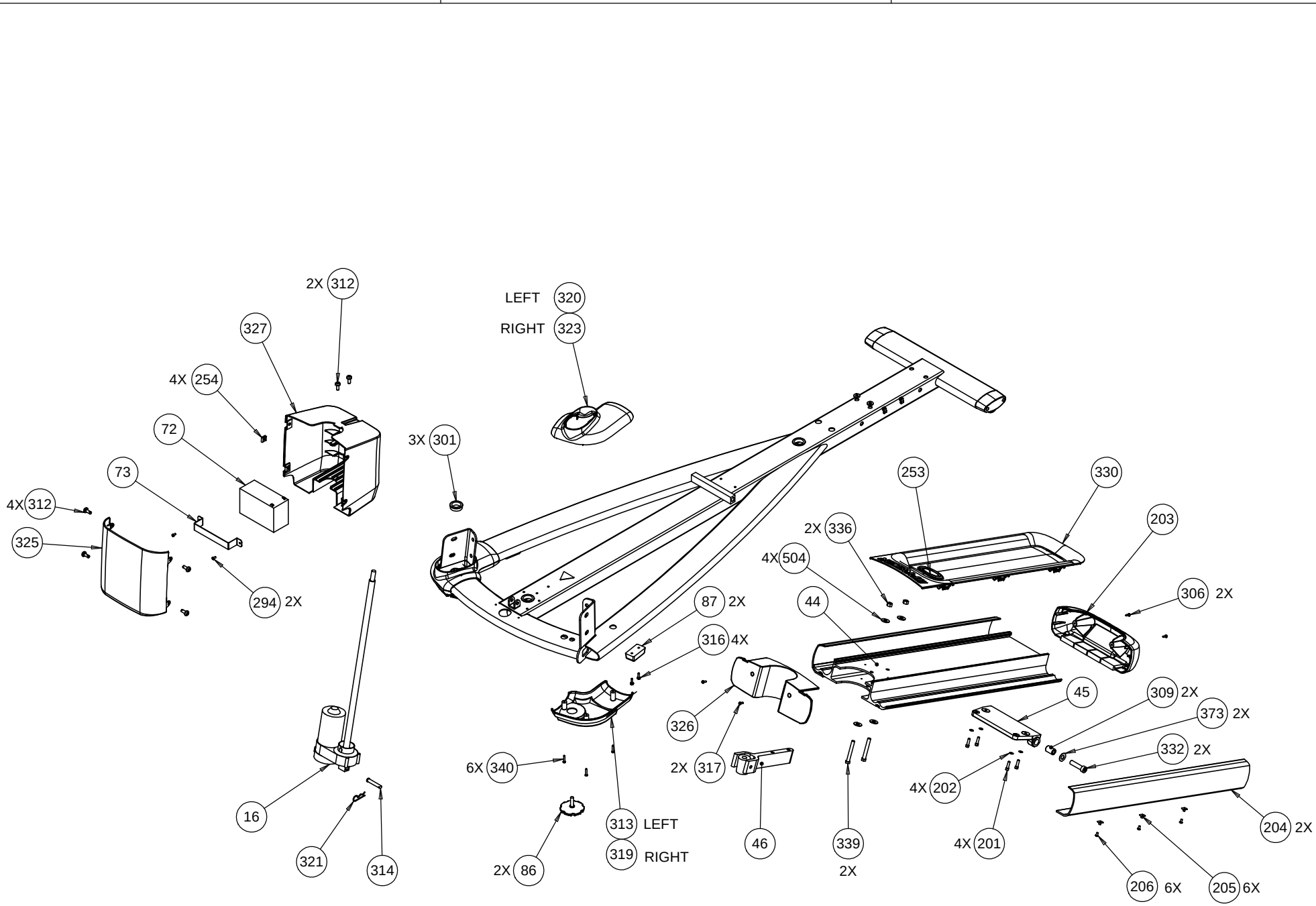

PAGE	OF	DWG. NO.	SUBREV
4	9	49031-101	AB

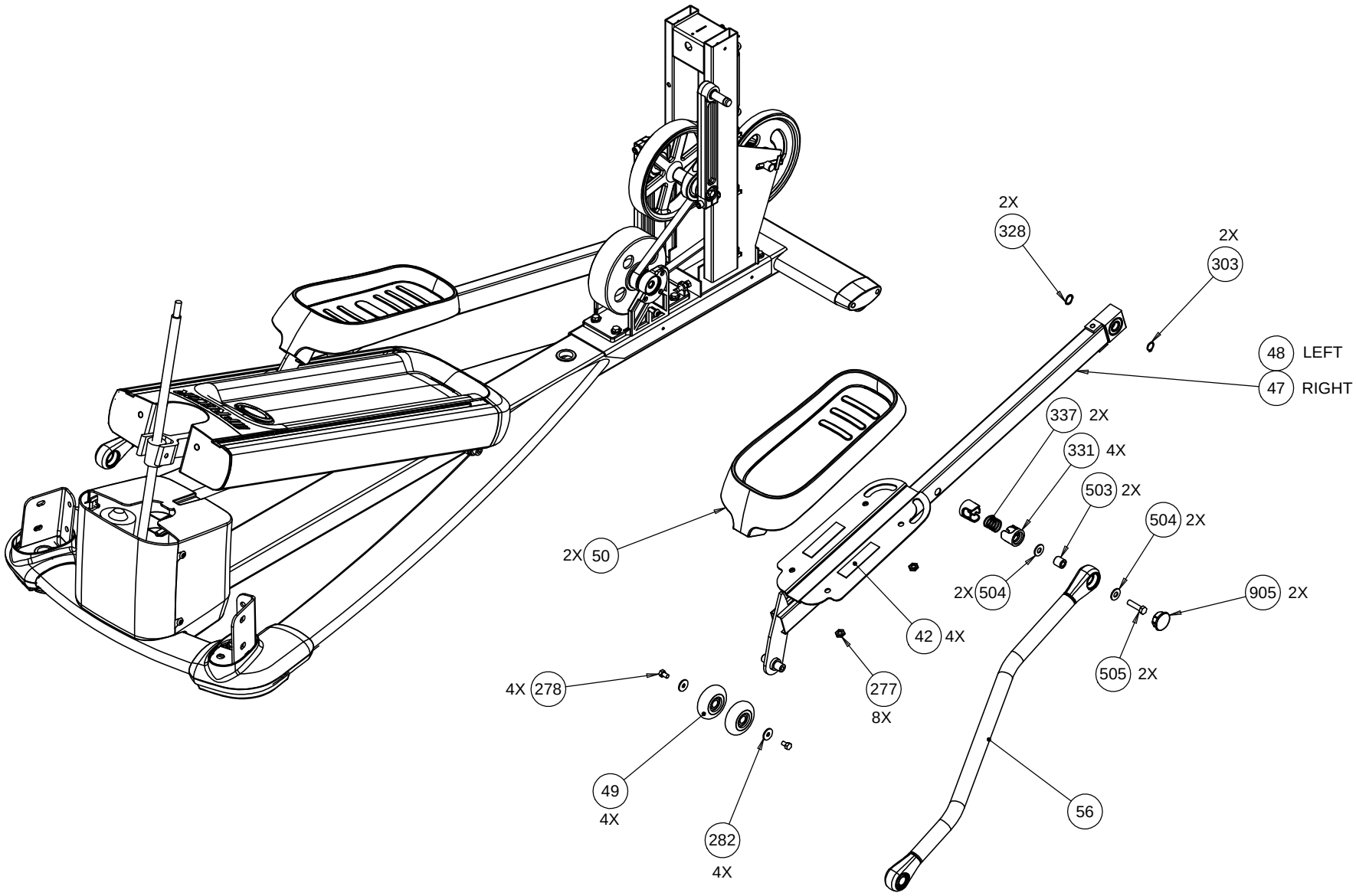

PAGE	OF	DWG. NO.	SUBREV
5	9	49031-101	AB

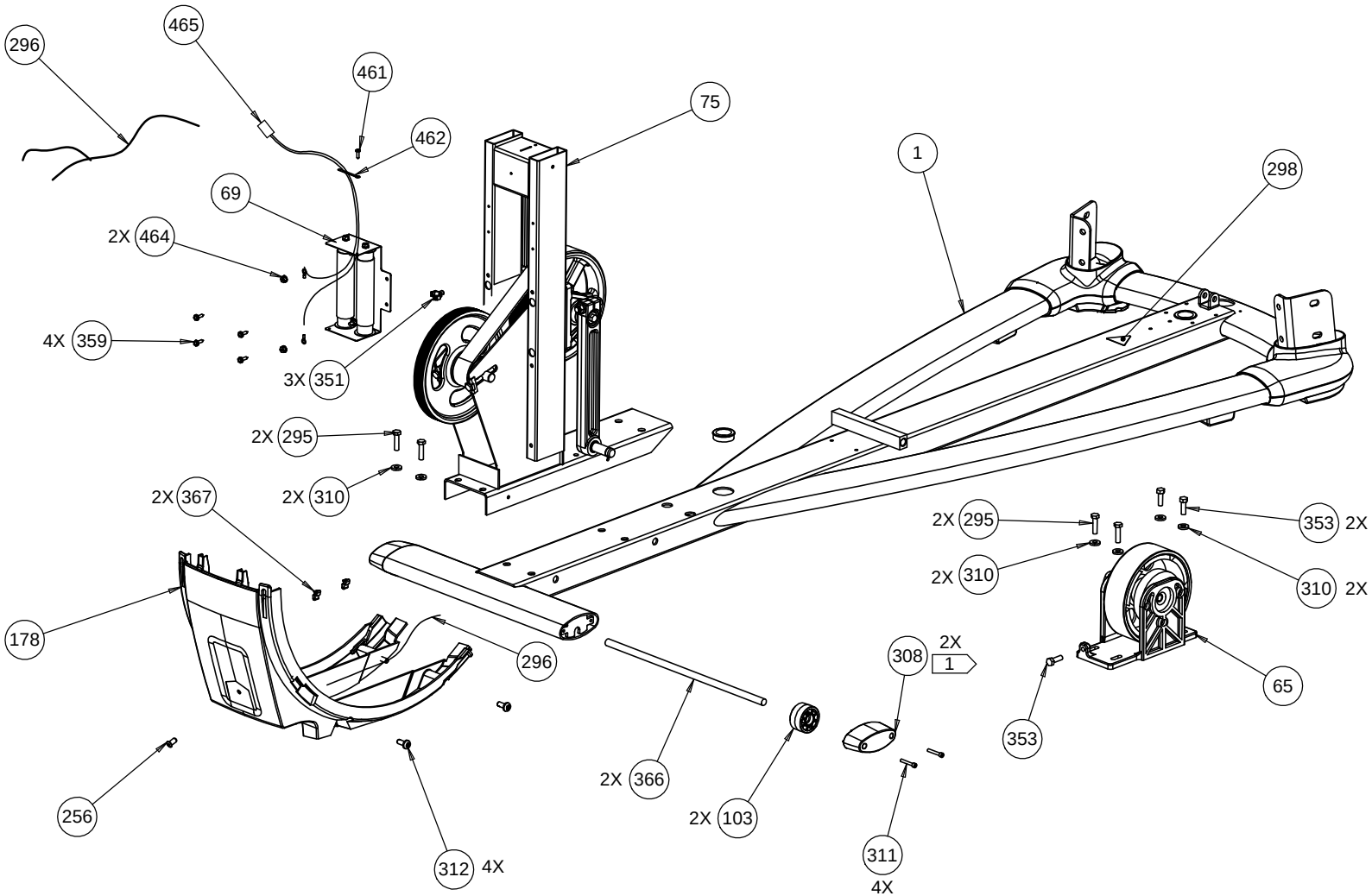

PAGE	OF	DWG. NO.	SUBREV
6	9	49031-101	AB

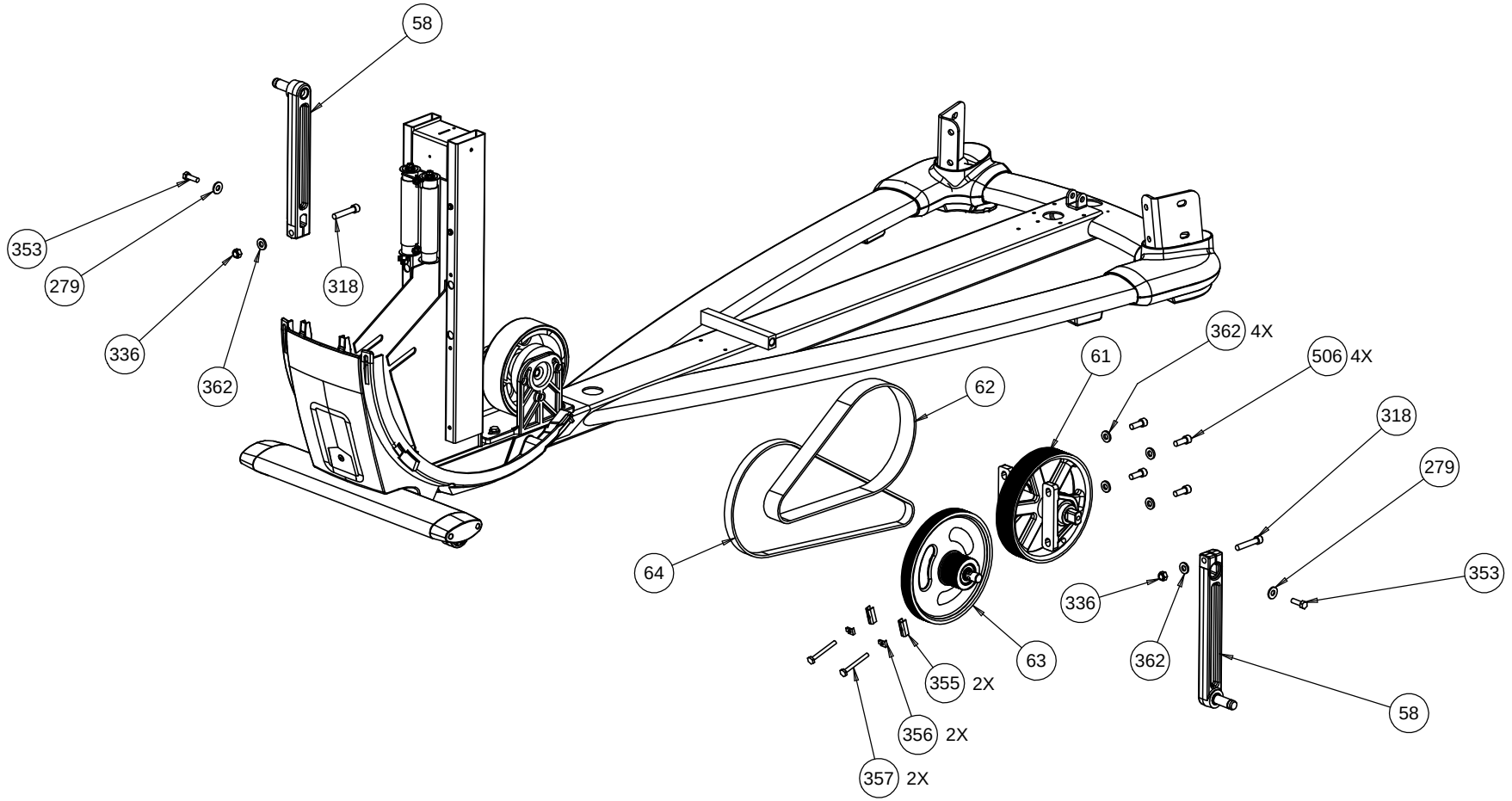

PAGE	OF	DWG. NO.	SUBREV
7	9	49031-101	AB

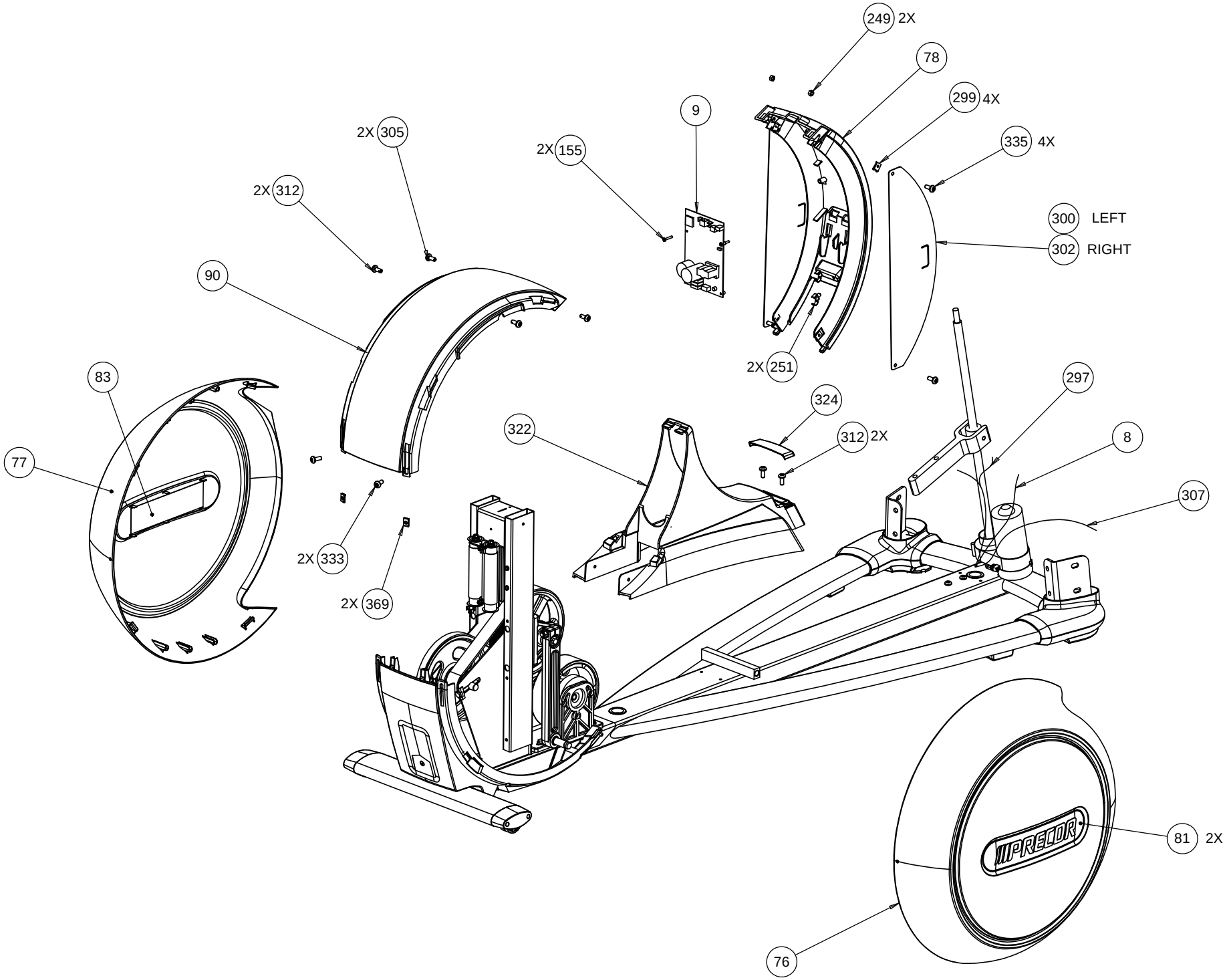

PAGE OF	DWG. NO.	SUBREV
8 9	49031-101	AB

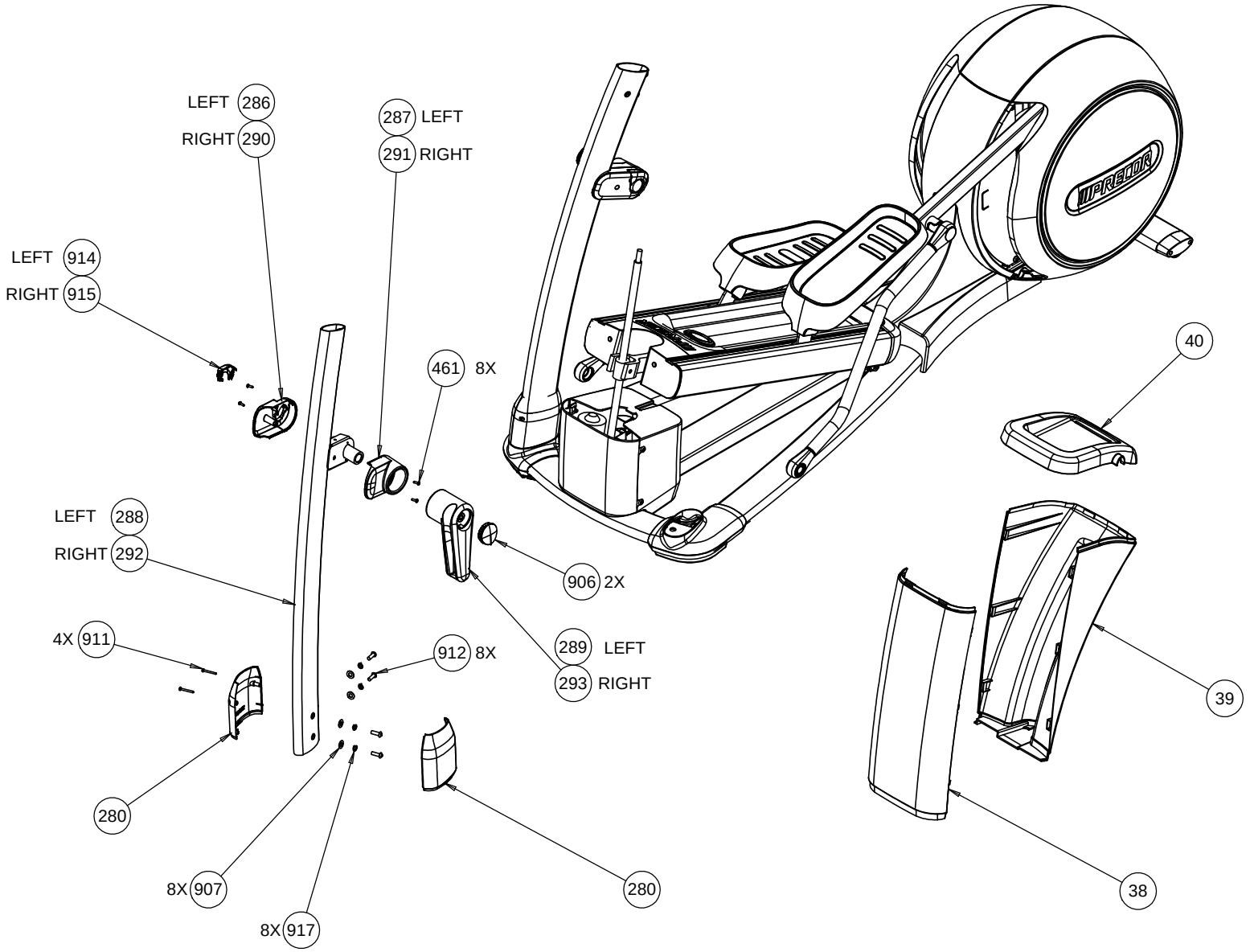

PAGE OF	DWG. NO.	SUBREV
9 9	49031-101	AB