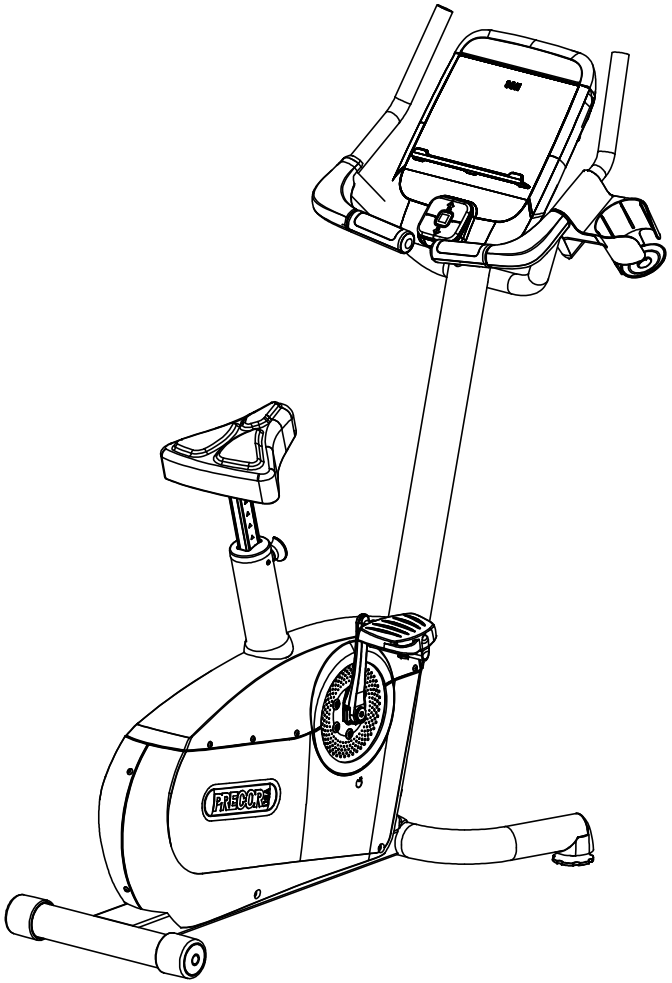

C846I UPRIGHT	P/N : 49024-101	SUBREV : M
DRAWN BY : MAH	DATE : 05.04.09	SHEET 1 OF 6

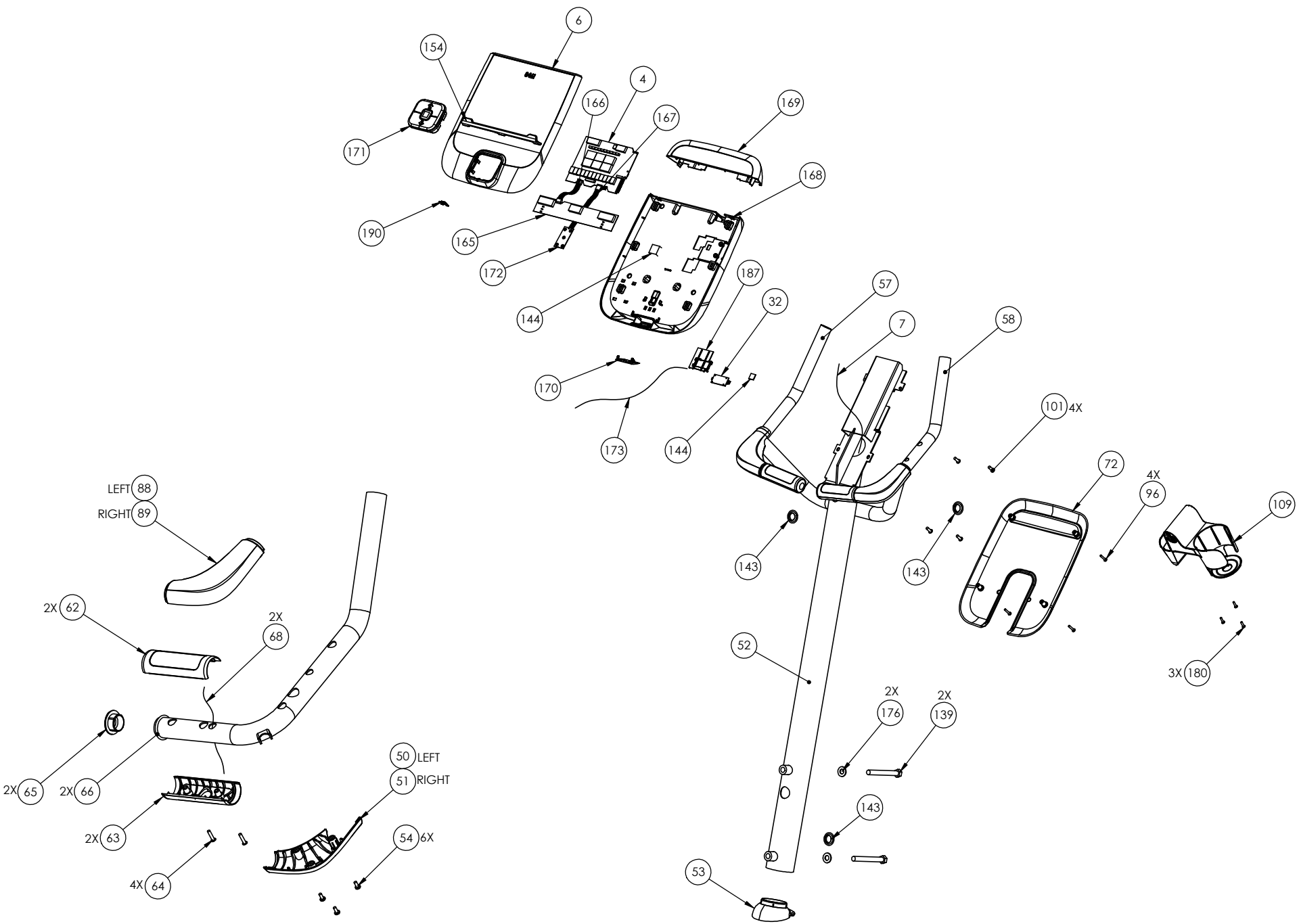

PAGE	OF	DWG. NO.	SUBREV
2	6	49024-101	M

NOTE: BOTH THE SECONDARY SHEAVE AND AXLE ARE INCLUDED IN KIT 58025-101, BUBBLE #91

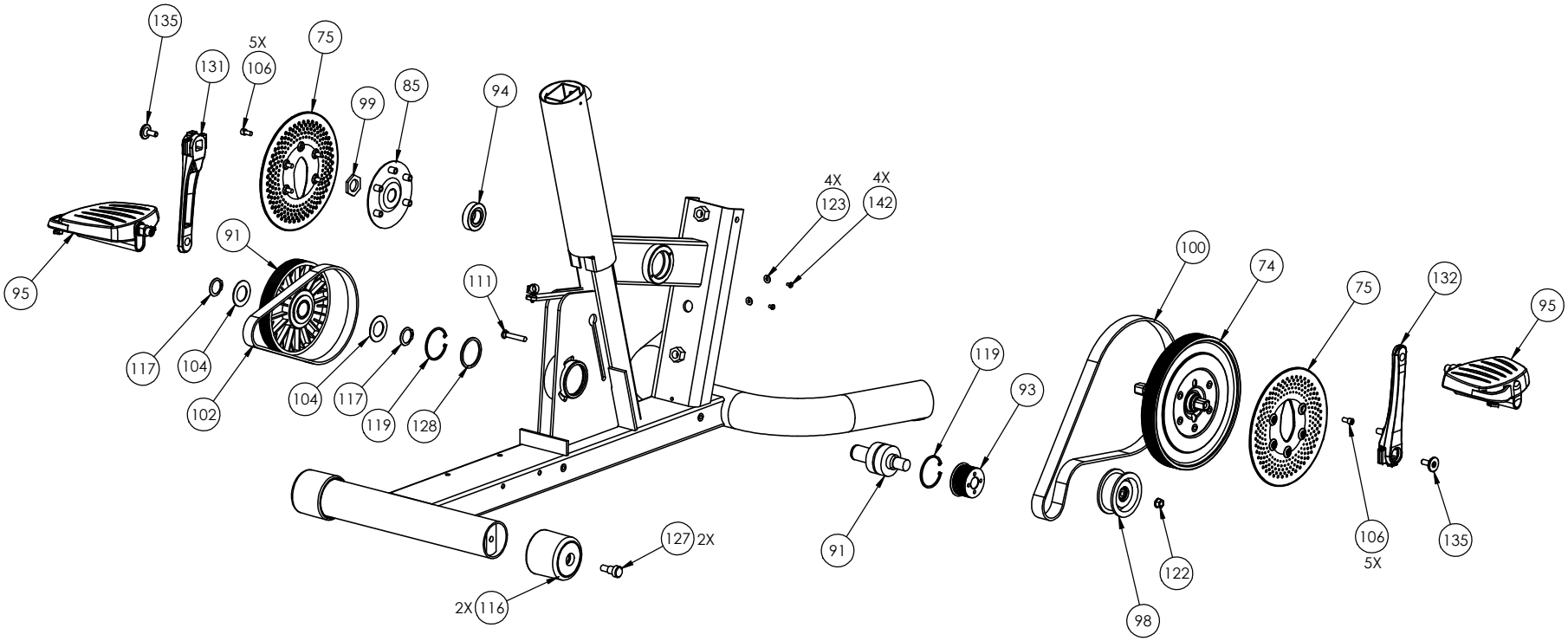

PAGE	OF	DWG. NO.	SUBREV
3	6	49024-101	M

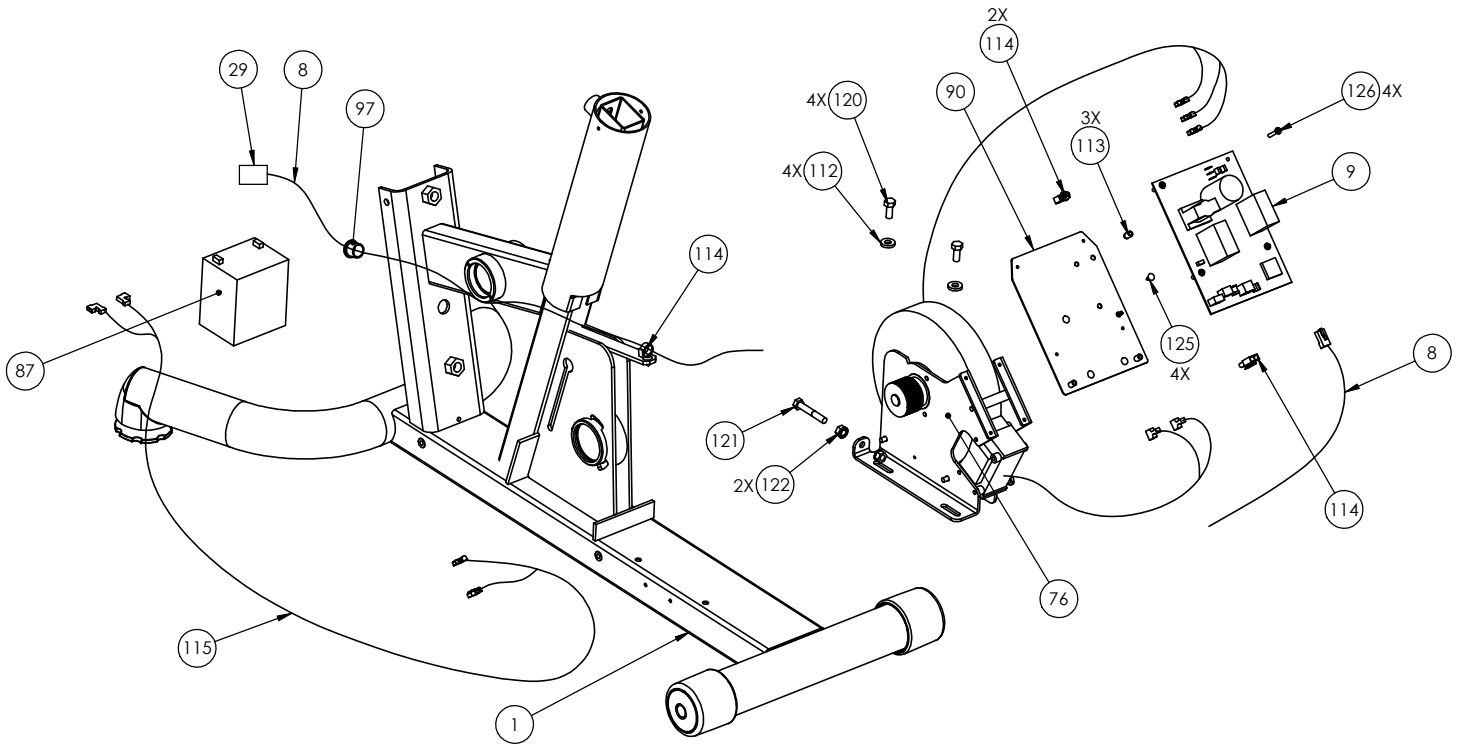

PAGE	OF	DWG. NO.	SUBREV
4	6	49024-101	M

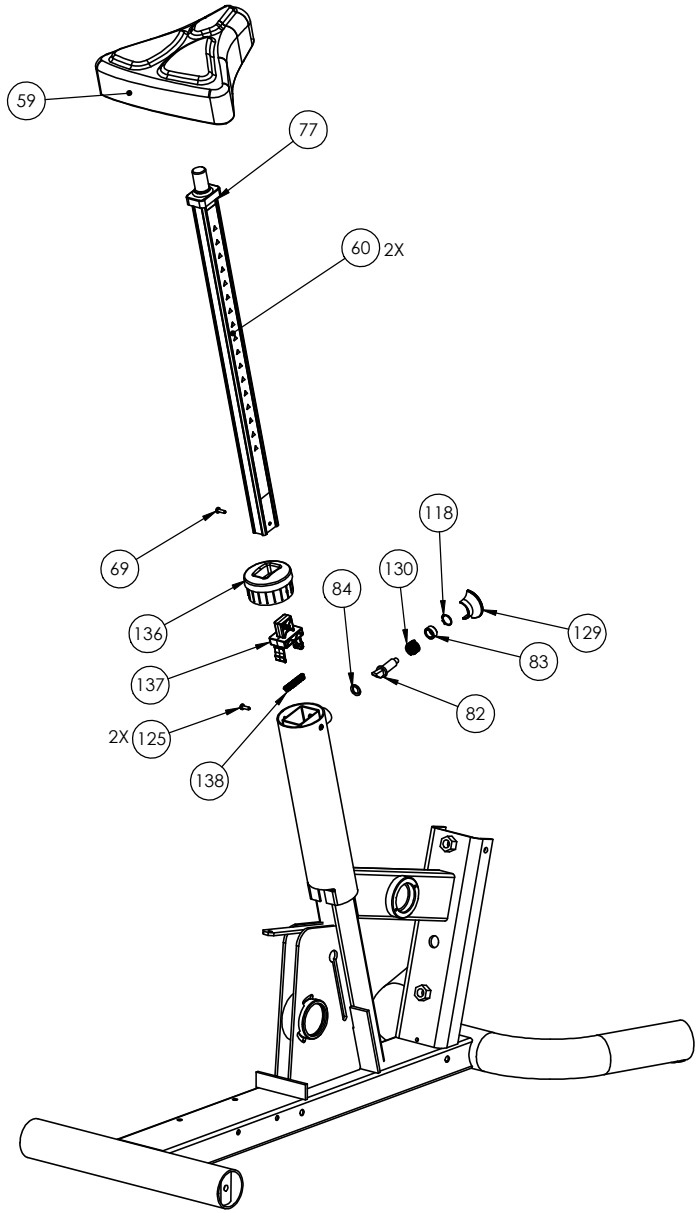

PAGE	OF	DWG. NO.	SUBREV
5	6	49024-101	M

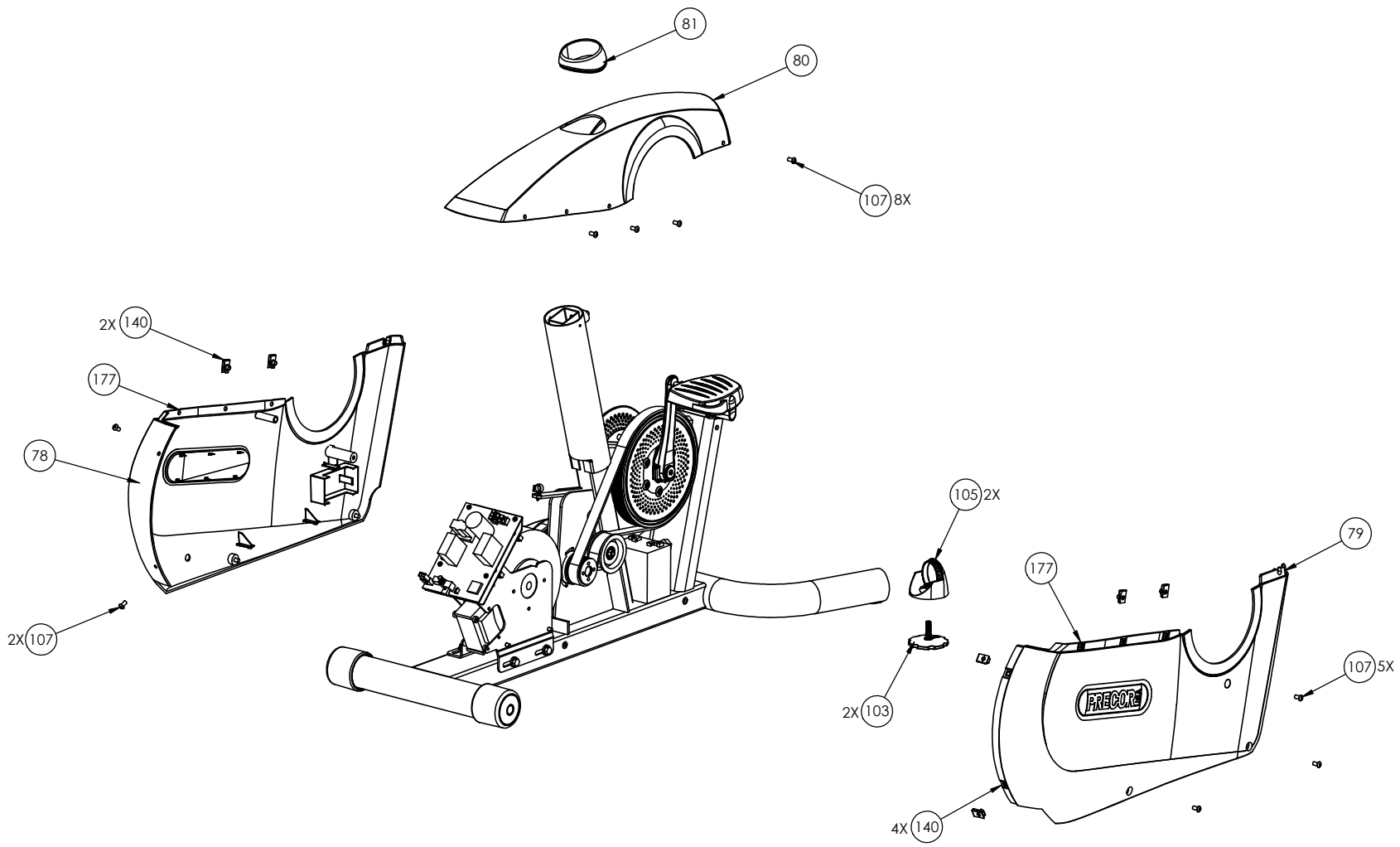

PAGE	OF	DWG. NO.	SUBREV
6	6	49024-101	M