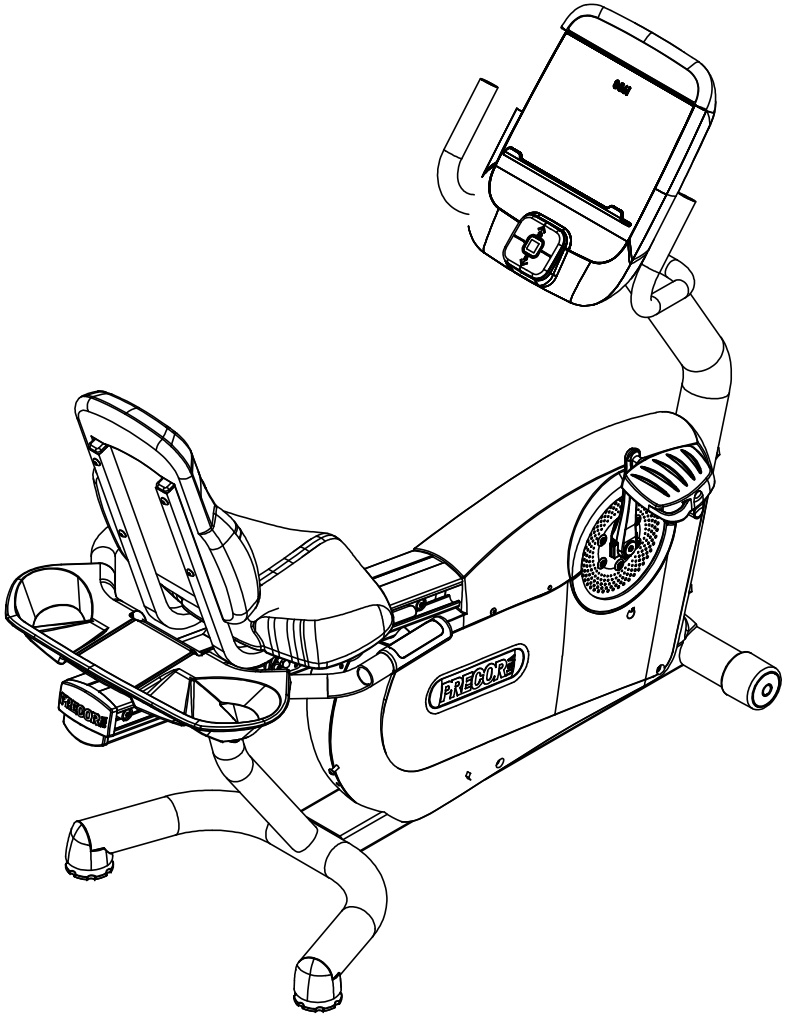

C846I RECUMBENT	P/N : 49025-101	SUBREV : K
DRAWN BY : MAH	DATE : 05.20.09	SHEET 1 OF 8

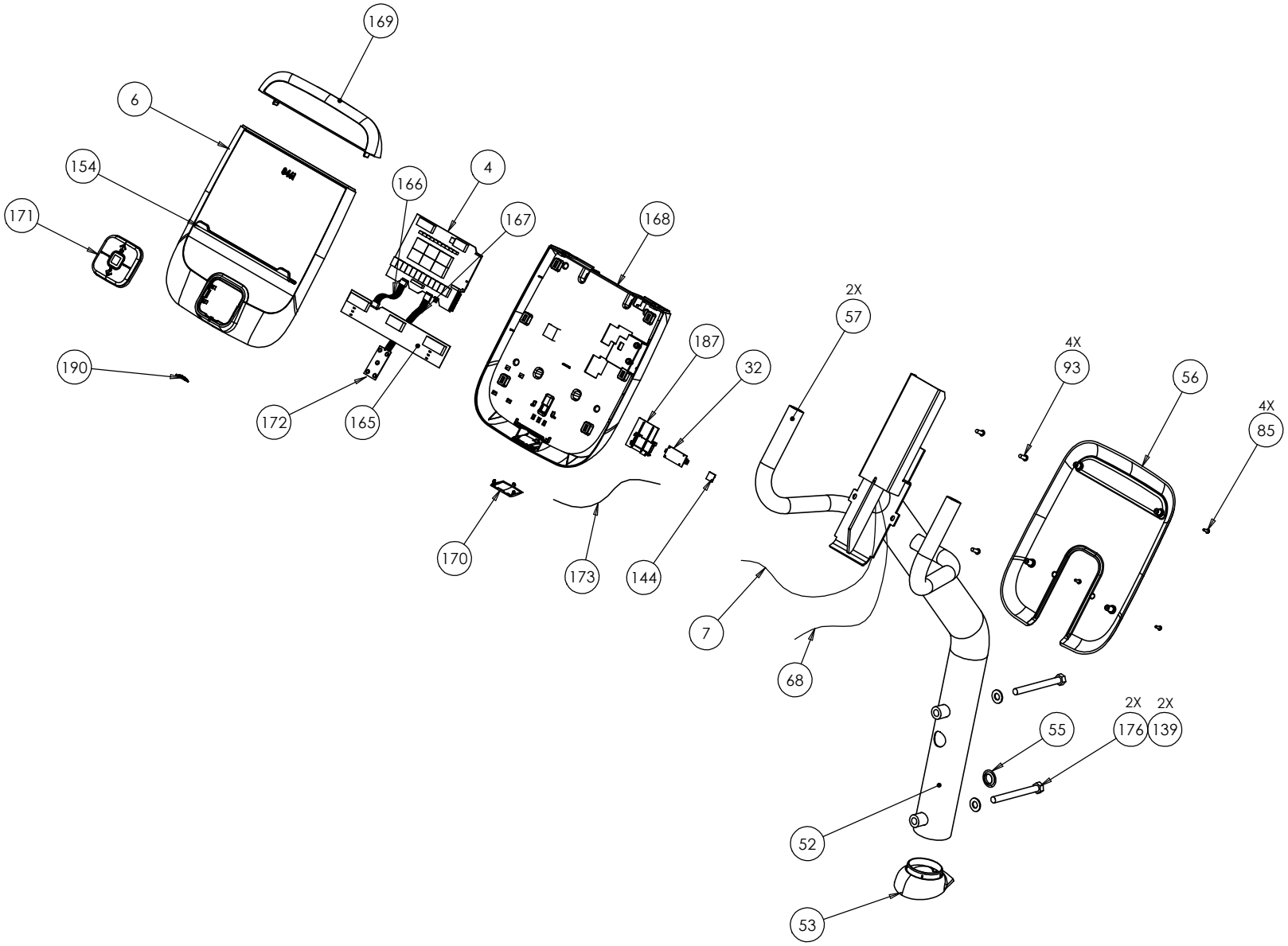

PAGE OF	DWG. NO.	SUBREV
2 8	49025-101	K

NOTE: BOTH THE SECONDARY SHEAVE AND AXLE ARE INCLUDED IN KIT 58025-101, BUBBLE #96

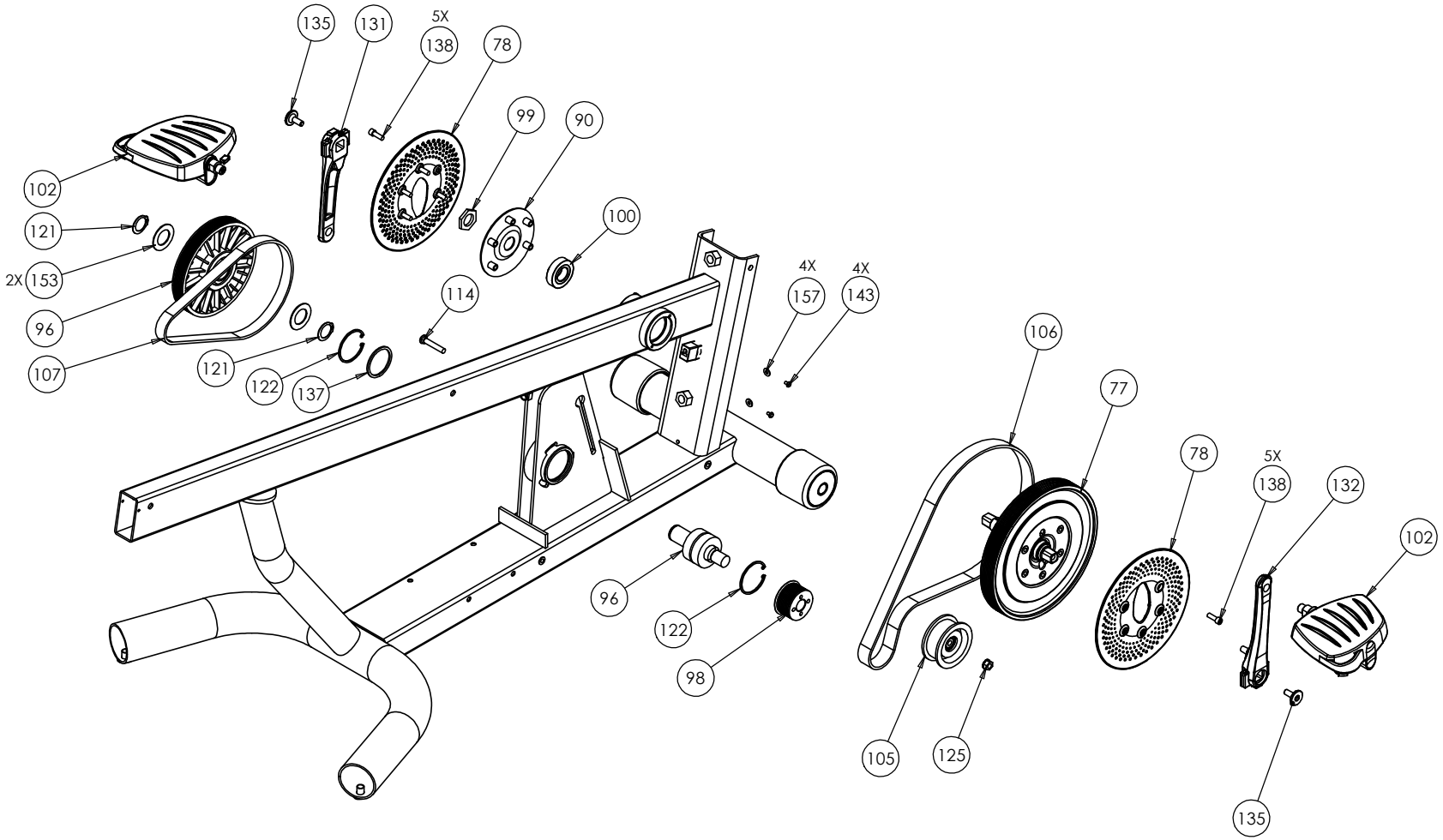

PAGE	OF	DWG. NO.	SUBREV
3	8	49025-101	K

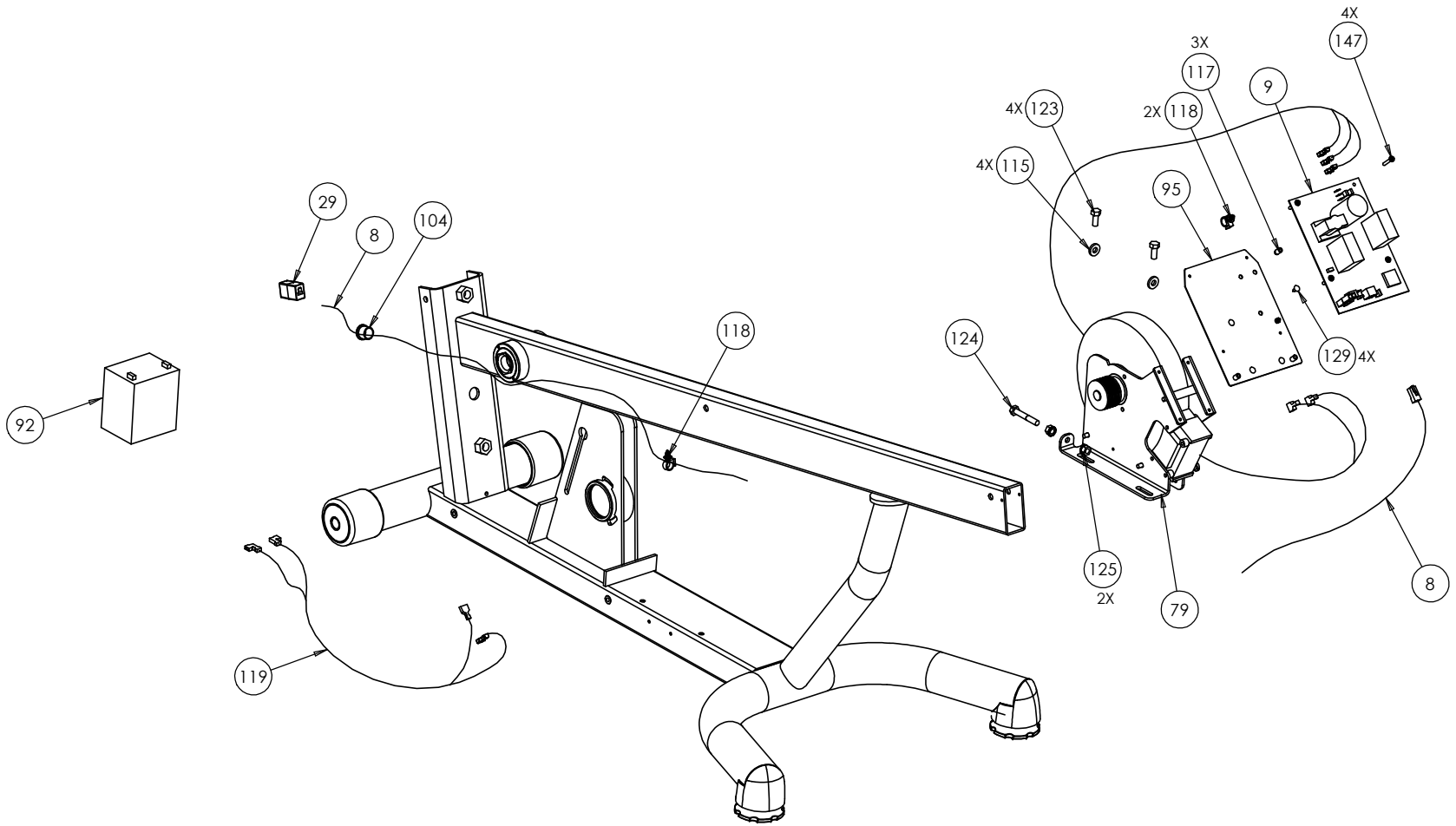

PAGE	OF	DWG. NO.	SUBREV
4	8	49025-101	K

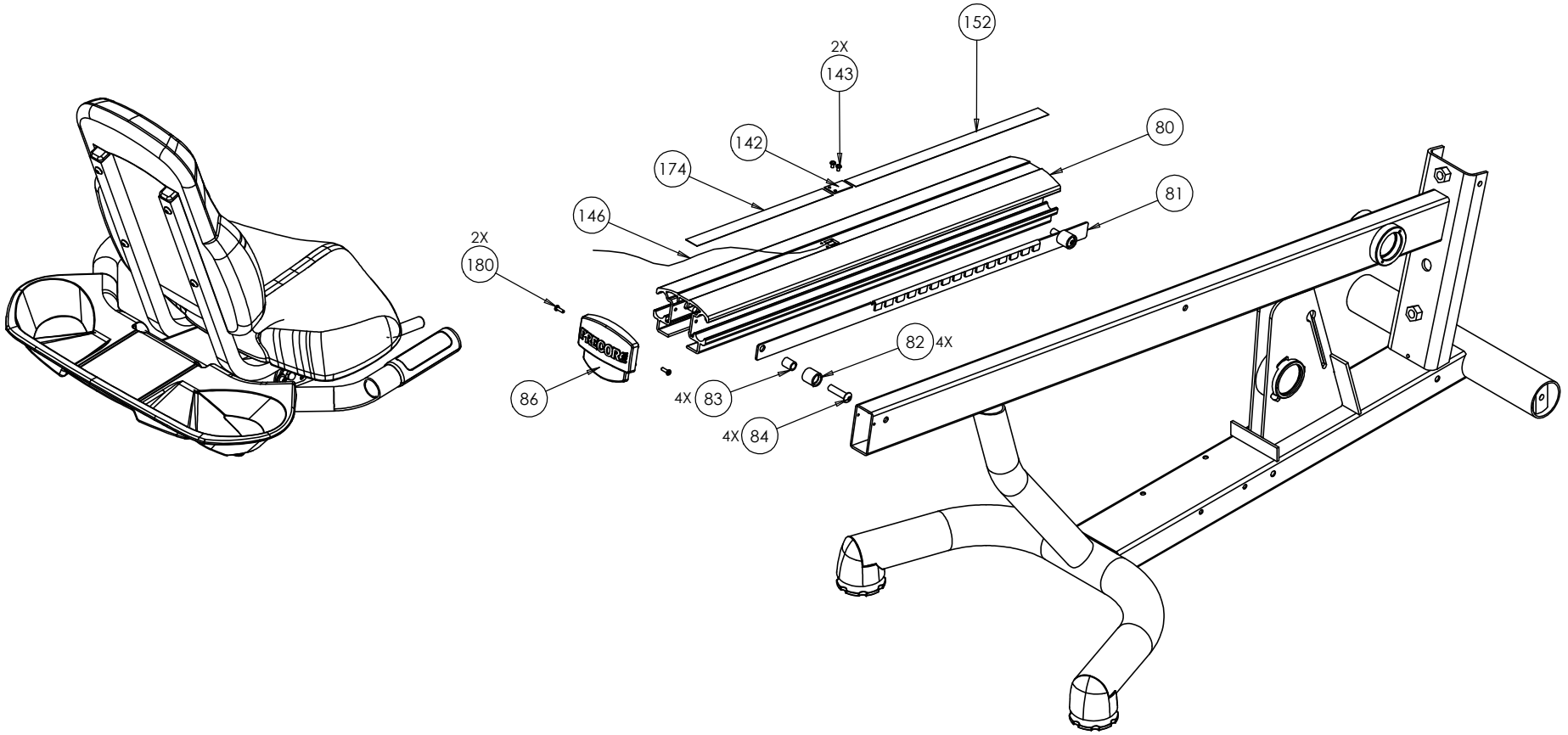

PAGE	OF	DWG. NO.	SUBREV
5	8	49025-101	K

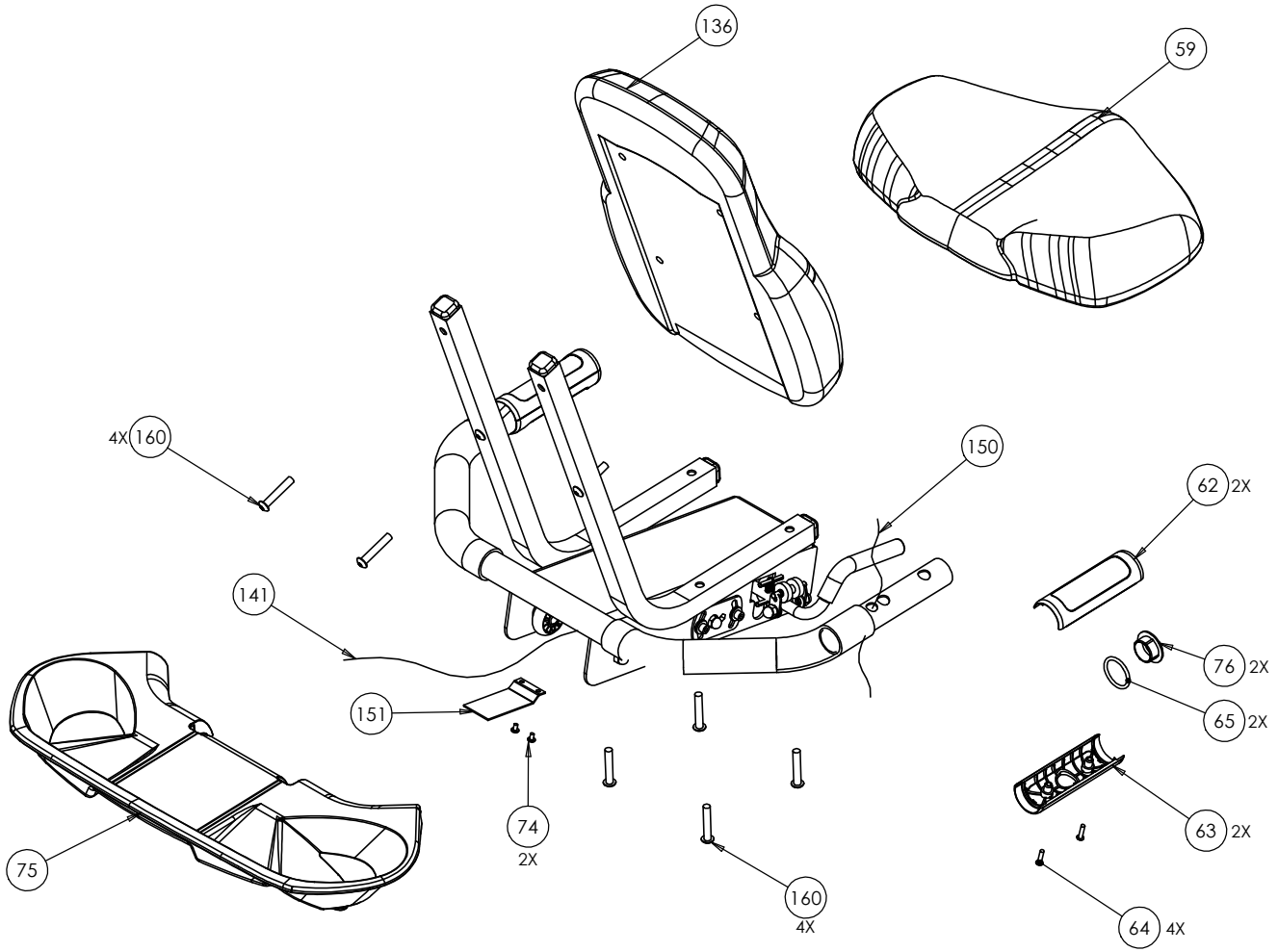

PAGE OF	DWG. NO.	SUBREV
6 8	49025-101	K

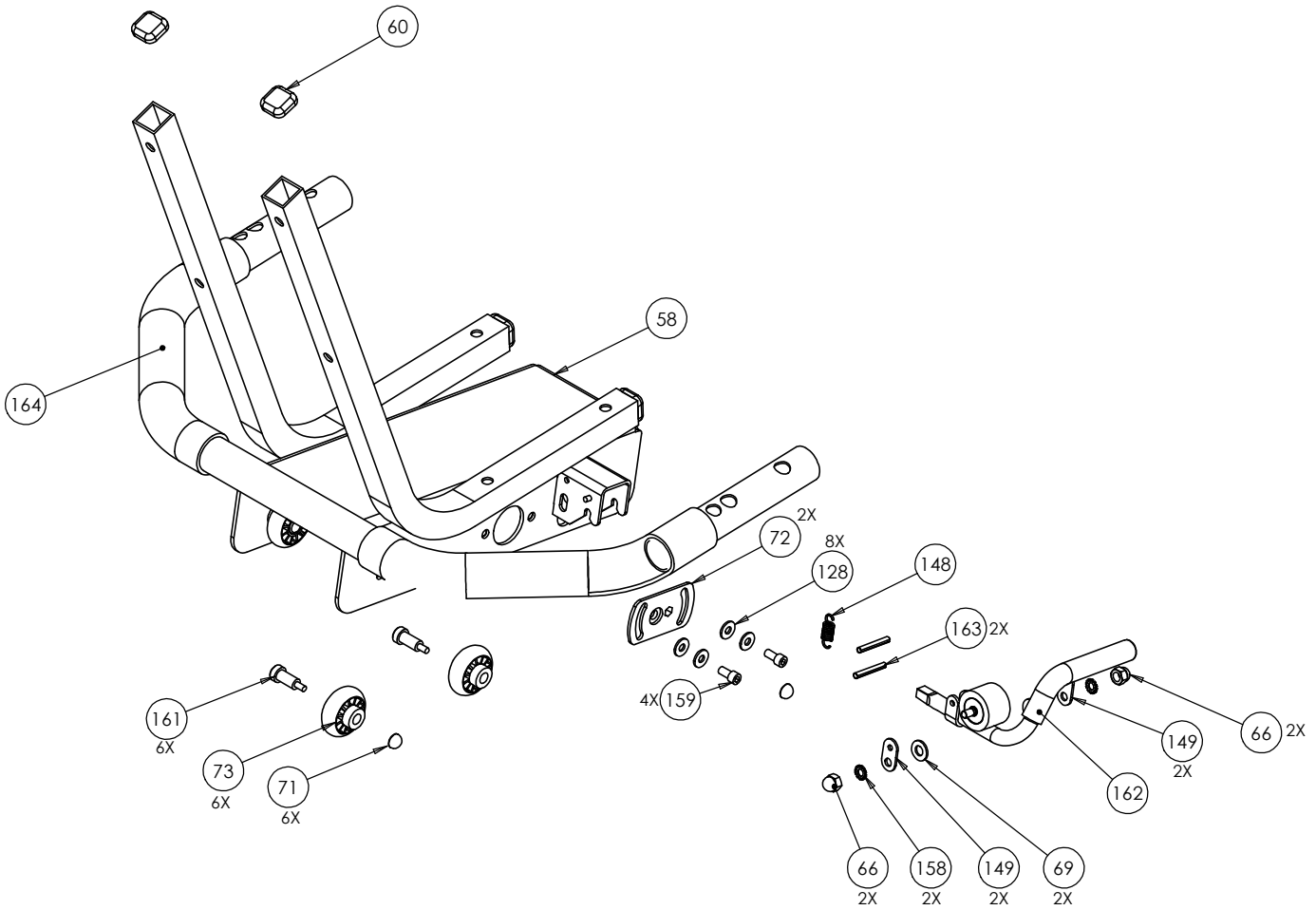

PAGE	OF	DWG. NO.	SUBREV
7	8	49025-101	K

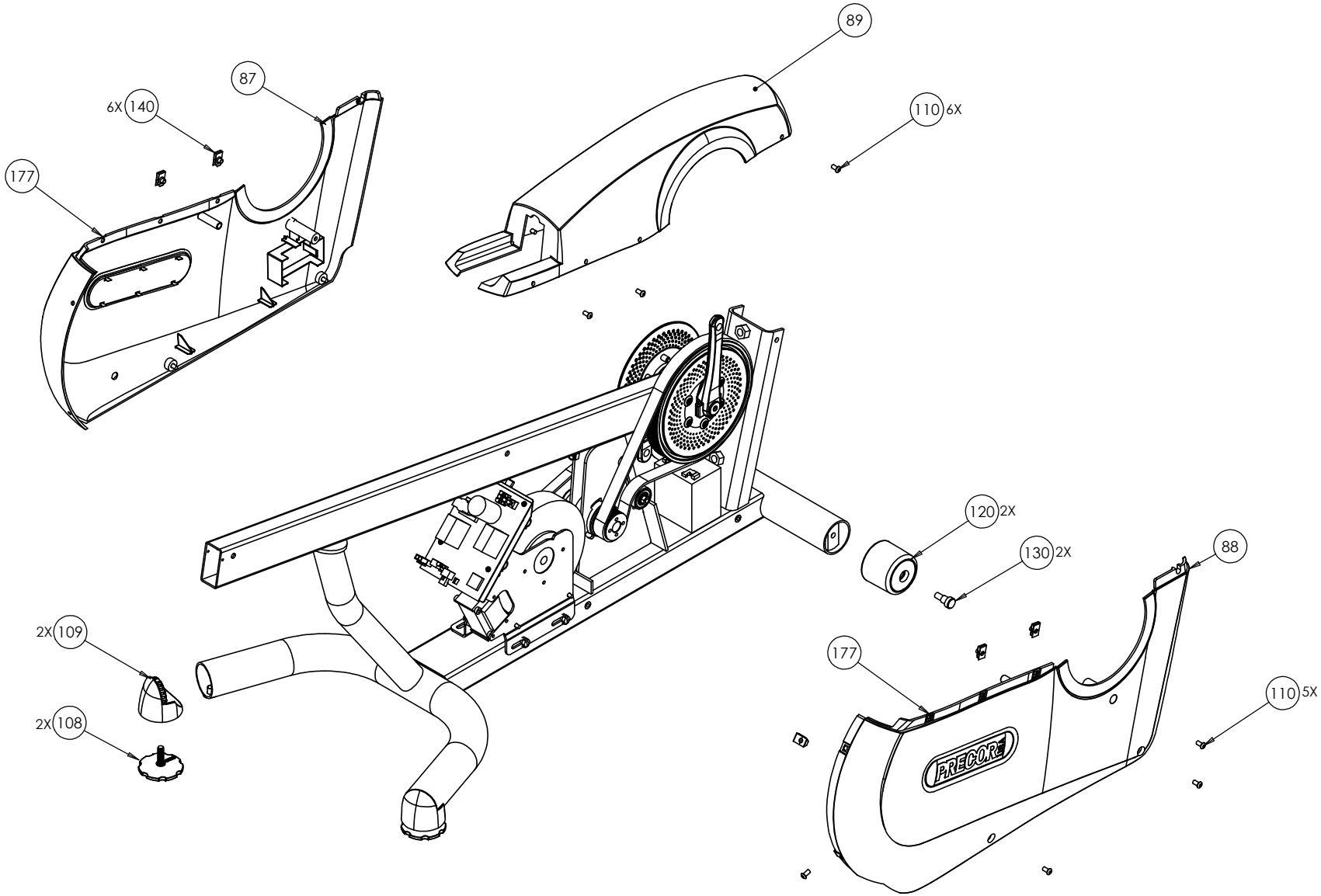

PAGE OF	DWG. NO.	SUBREV
8 8	49025-101	K