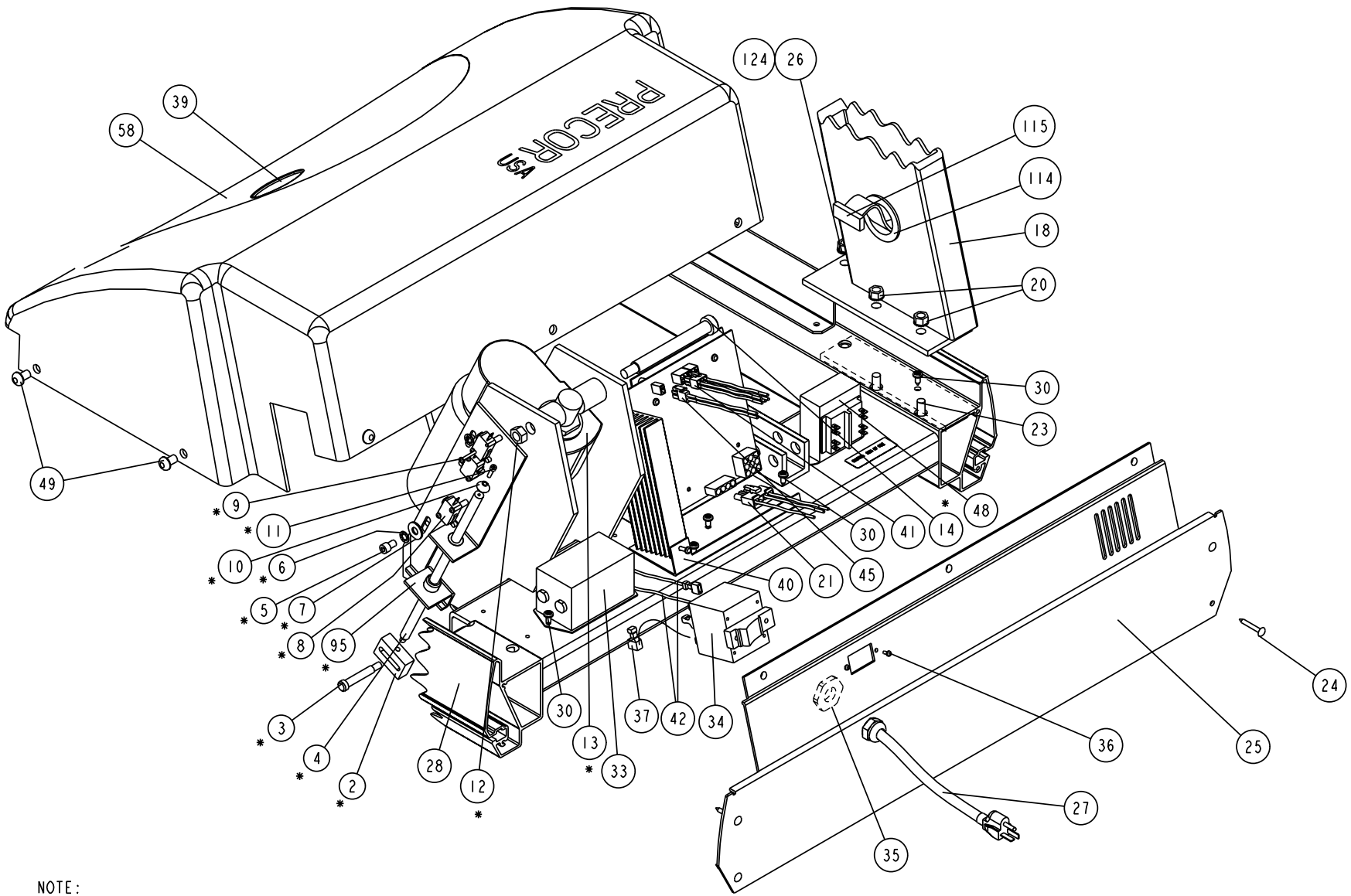

NOTE:

1. ITEMS MARKED WITH (*) APPLY TO C944 PWM ONLY.

C944, C940 PWM	P/N: 37338-102	REV: G02
DRAWN BY: GRANADOSIN	DATE: 08.28.05	SHEET 1 OF 6

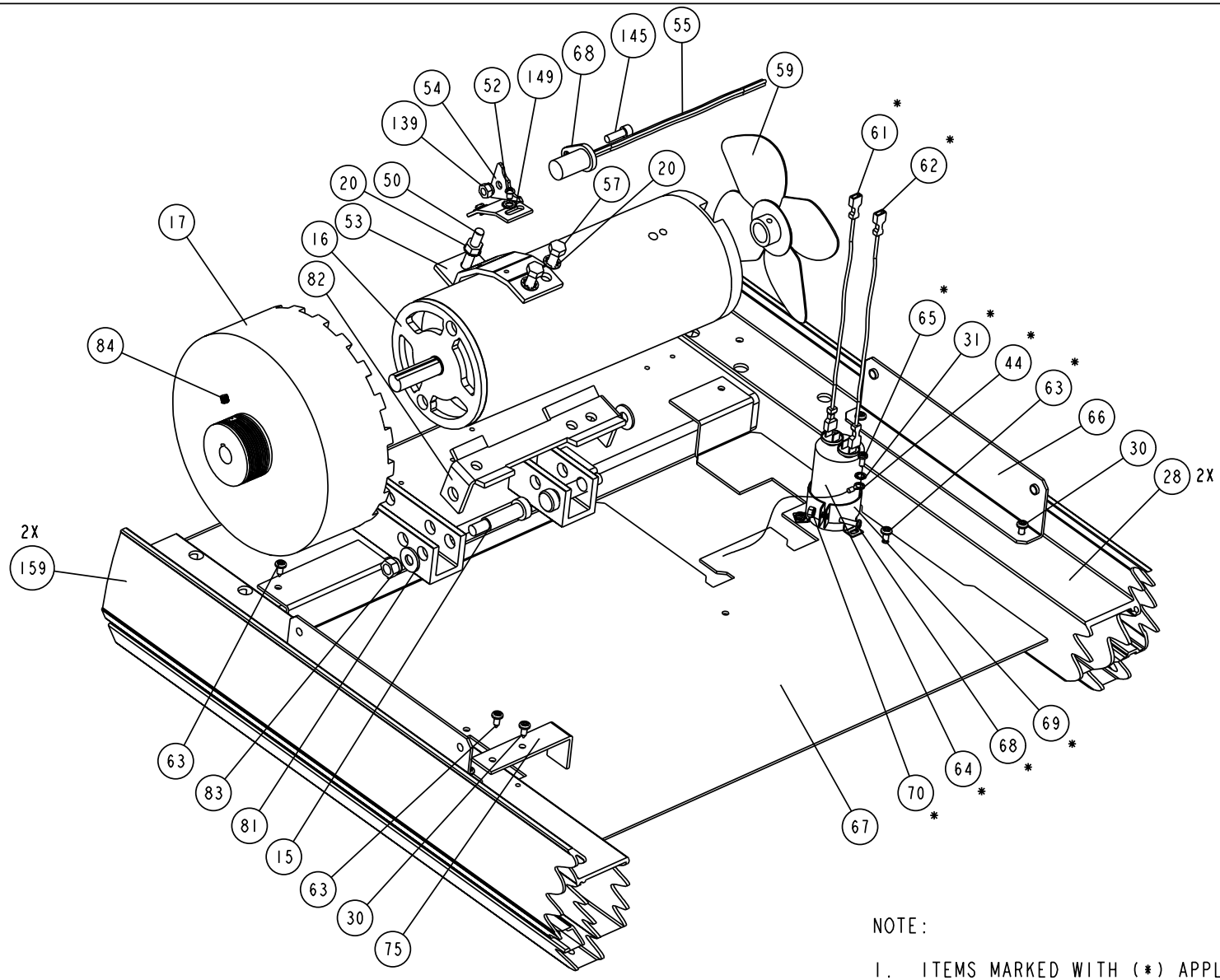

NOTE:

1. ITEMS MARKED WITH (*) APPLY TO C944 PWM ONLY.

C944, C940 PWM	P/N: 37338-102	REV: G02
DRAWN BY: GRANADOSIN	DATE: 08.28.05	SHEET 2 OF 6

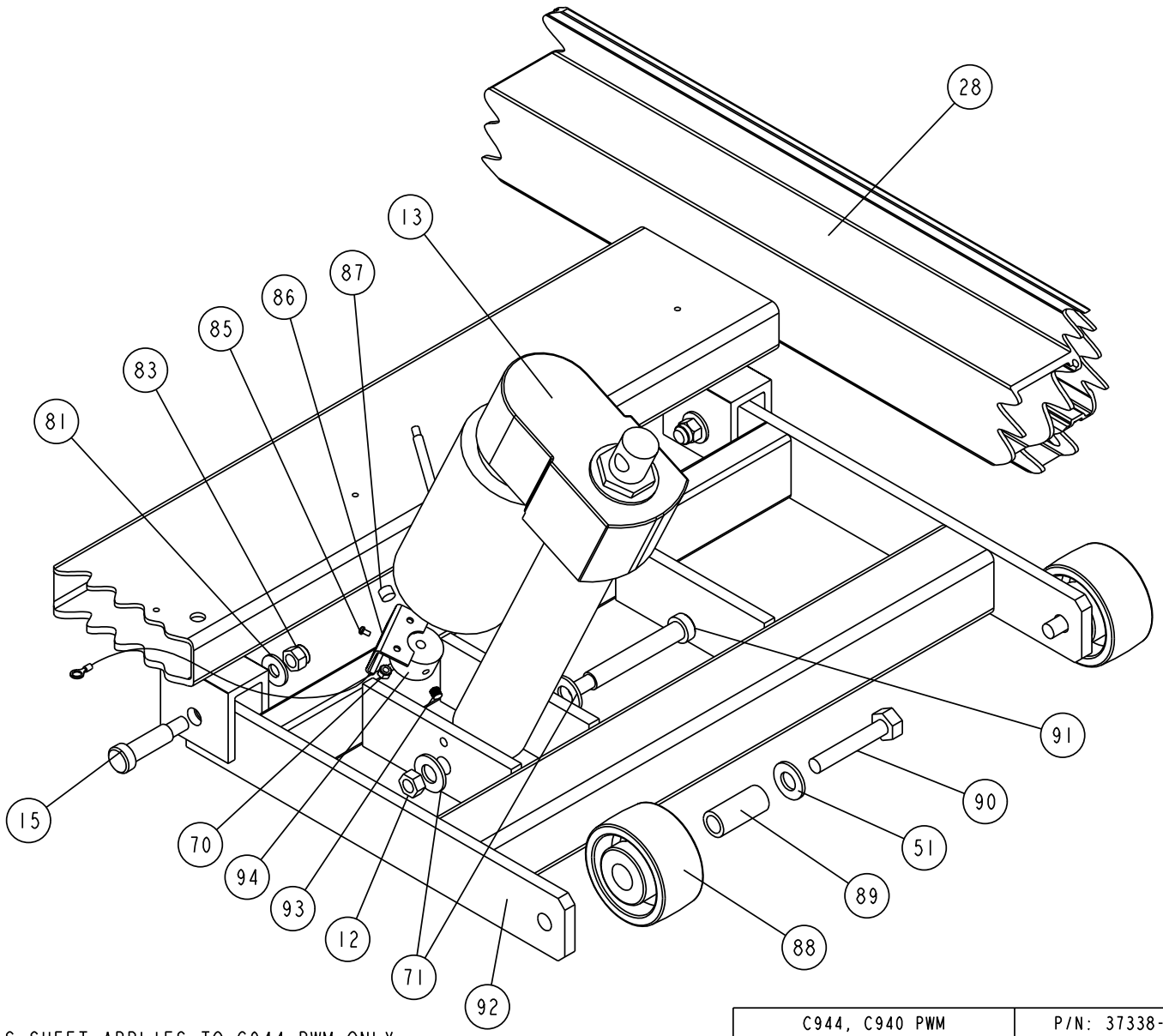

Ⓓ NOTE:

1. THIS SHEET APPLIES TO C944 PWM ONLY.

C944, C940 PWM	P/N: 37338-102	REV: G02
DRAWN BY: GRANADOSIN	DATE: 08.28.05	SHEET 3 OF 6

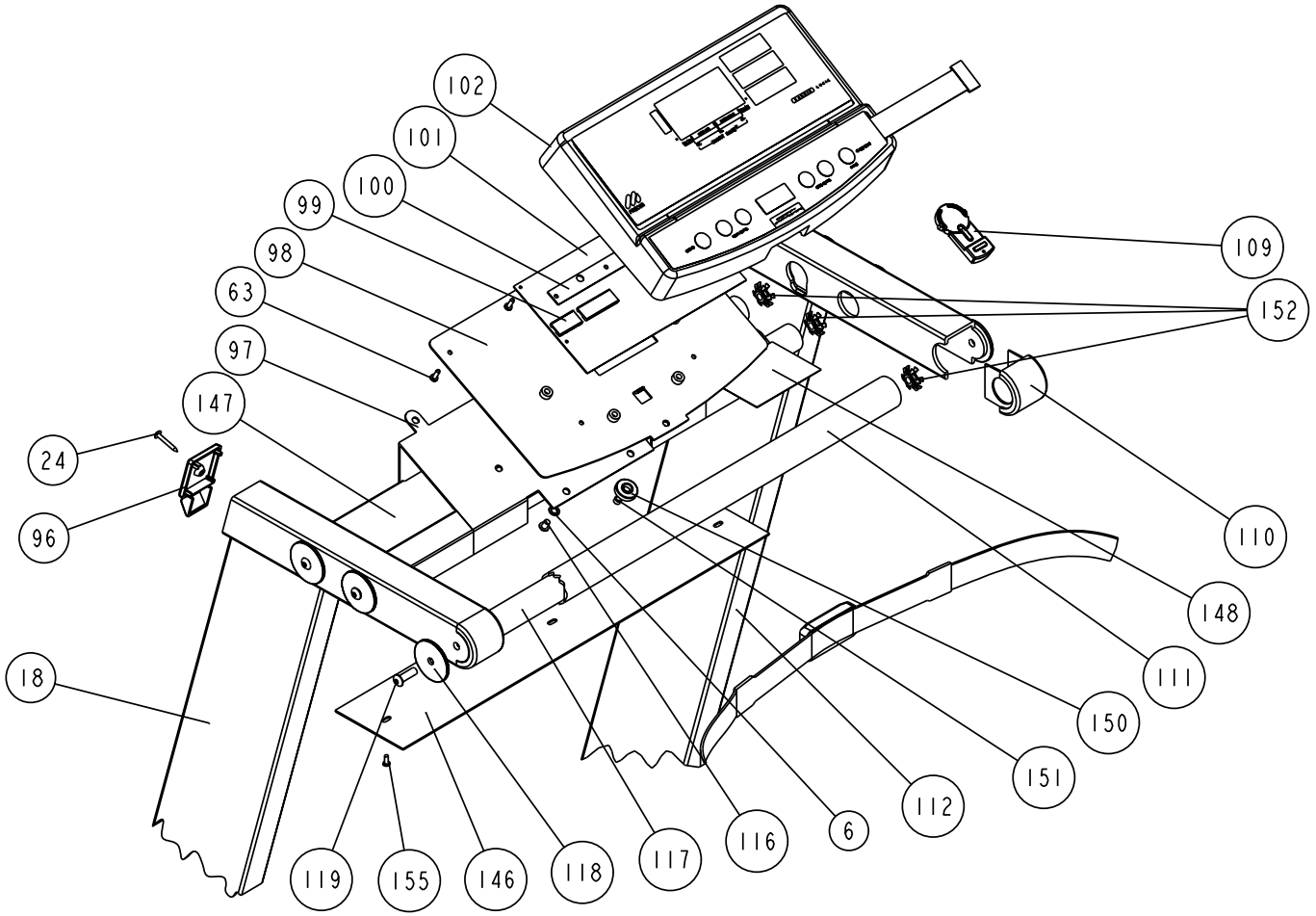

C944, C940 PWM	P/N: 37338-102	REV: G02
DRAWN BY: GRANADOSIN	DATE: 08.28.05	SHEET 4 OF 6

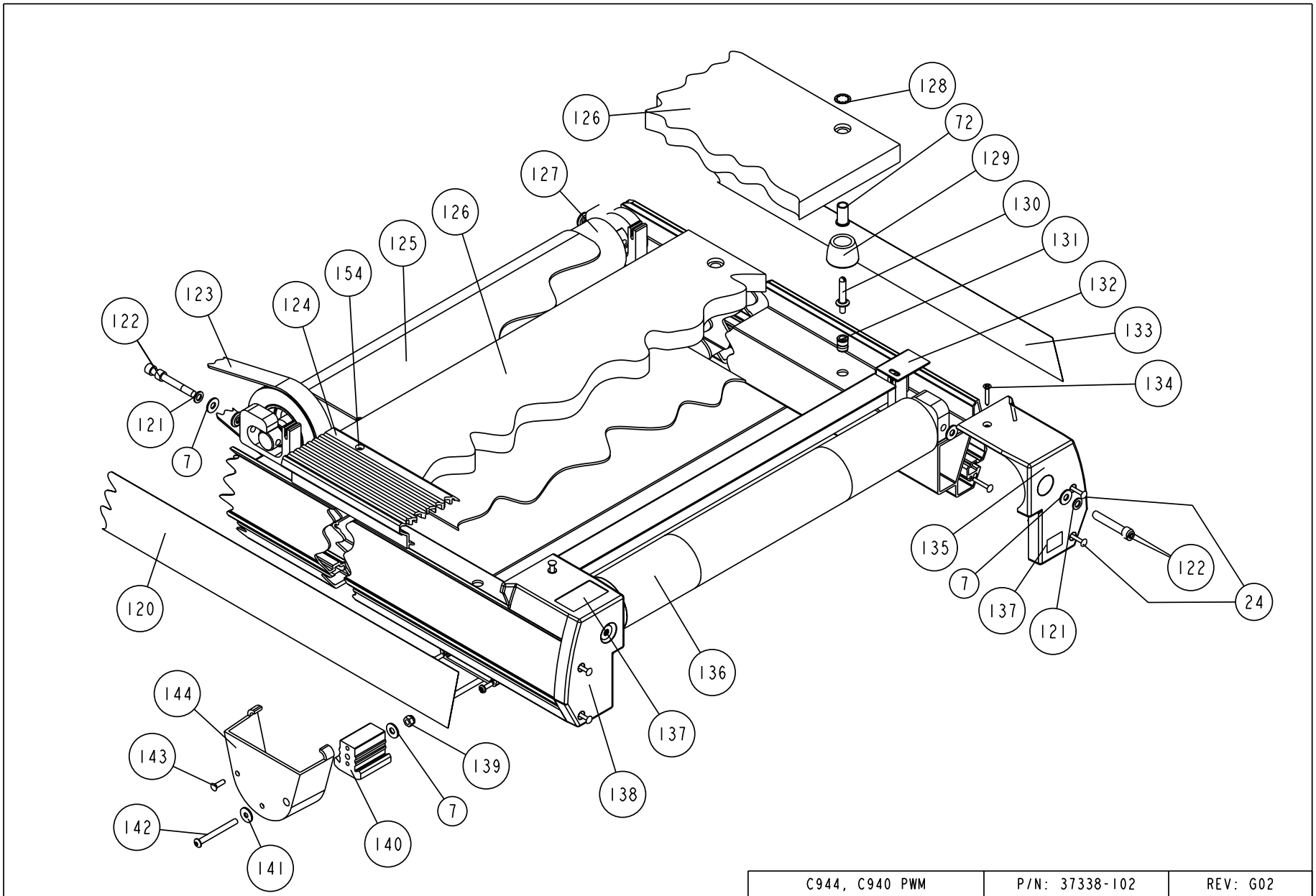

C944, C940 PWM	P/N: 37338-102	REV: G02
DRAWN BY: GRANADOSIN	DATE: 08.28.05	SHEET 5 OF 6

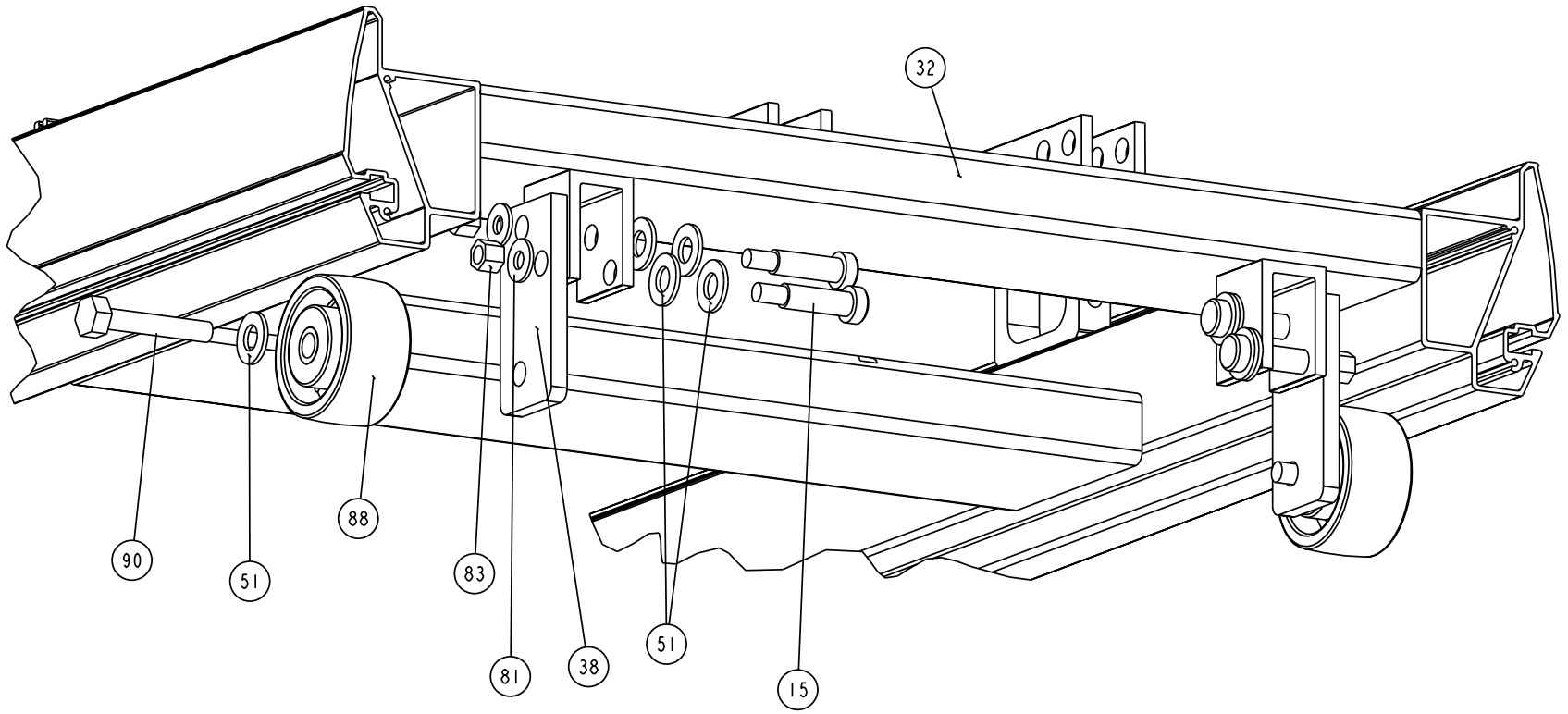

(D) NOTE:

1. THIS SHEET APPLIES TO C940 PWM ONLY.

C944, C940 PWN	P/N: 37338-102	REV: G02
DRAWN BY: GRANADOSIN	DATE: 08.28.05	SHEET 6 OF 6