Technogym® copyright – restricted document – copy forbidden

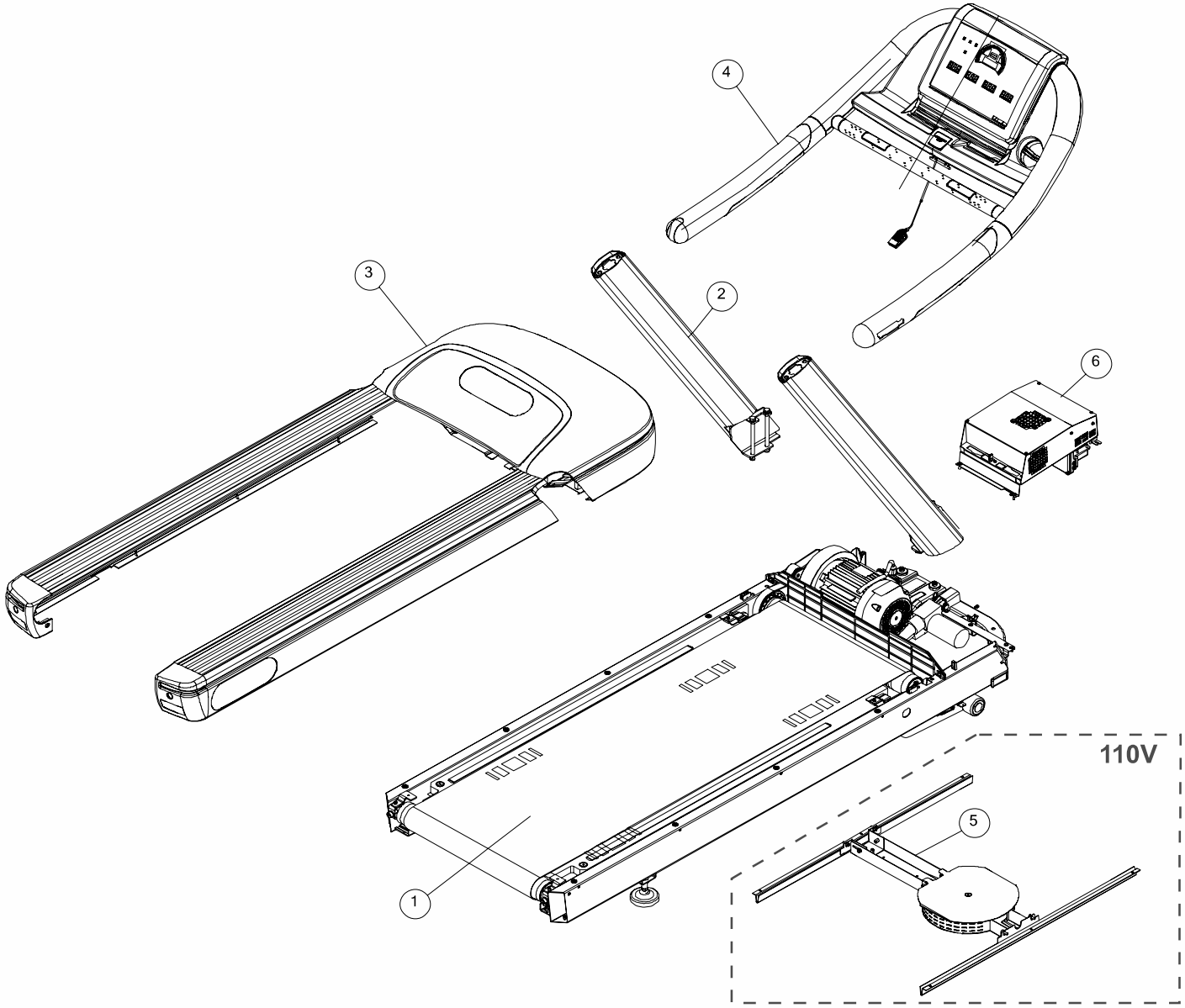

Technogym® copyright – restricted document – copy forbidden

Pos	Code	Description	Specification	N	Q.ty
1	H0004018old	See table FRAME	/		1
2	H0004087OLD	See table UPRIGHTS	/		1
3	H0004090OLD	See table CASING	/		1
4	H0006882	See table DASHBOARD [500/700]	/		1
5	H0007401	See table AUTOTRANSFORMER	/		1
6	SEENOTE	SEE NOTE	/	ih1	0

IH	WARNING - NOTA
1	For the following S.N., see table " Boxes **ALE-WIN**": Per i seguenti S.N., vedi tavola "Scatole ALE-WIN": ***EXCITE*** **DAK2EL (500)**: DAK2EL13000462 up to all S.N. **DAK2AL (500-multivoltage)**: all S.N. **DAK3EL (700)**: DAK3EL13000210 up to all S.N. **DAK3AL (700-multivoltage)**: all S.N. **DAK3EY (Visio Capacitive)**: DAK3EY13000239 up to all S.N. **DAK3EV (Unity)**: all S.N. **DAK3AV (Unity-multivoltage)**: all S.N. ***FORMA*** **DDJ5EL / DDJ5AL**: all S.N.
	For the following S.N., see table " Boxes **ALE-MET / AT-UL**": Per i seguenti S.N., vedi tavola "Scatole ALE-MET / AT-UL": ***EXCITE*** **DAK2EL (500)**: all S.N. up to DAK2EL13000461 **DAK2UL (500)**: all S.N. **DAK22L (500)**: all S.N. **DAK21L (500)**: all S.N. **DAK3EL (700)**: all S.N. up to DAK3EL13000209 **DAK3UL (700)**: all S.N. **DAK32L (700)**: all S.N. **DAK31L (700)**: all S.N. **DAK3EY (Visio Capacitive)**: all S.N. up to DAK3EY13000238 **DAK32Y (Visio Capacitive)**: all S.N. **DAK31Y (Visio Capacitive)**: all S.N. **DAK3*W (Visio Resistive)**: all S.N. **DAK3*C (Visio Resistive)**: all S.N. **DAK32V (Unity)**: all S.N. **DAK31V (Unity)**: all S.N. ***FORMA*** **DDJ51L / DDJ52L**: all S.N.

Technogym® copyright – restricted document – copy forbidden

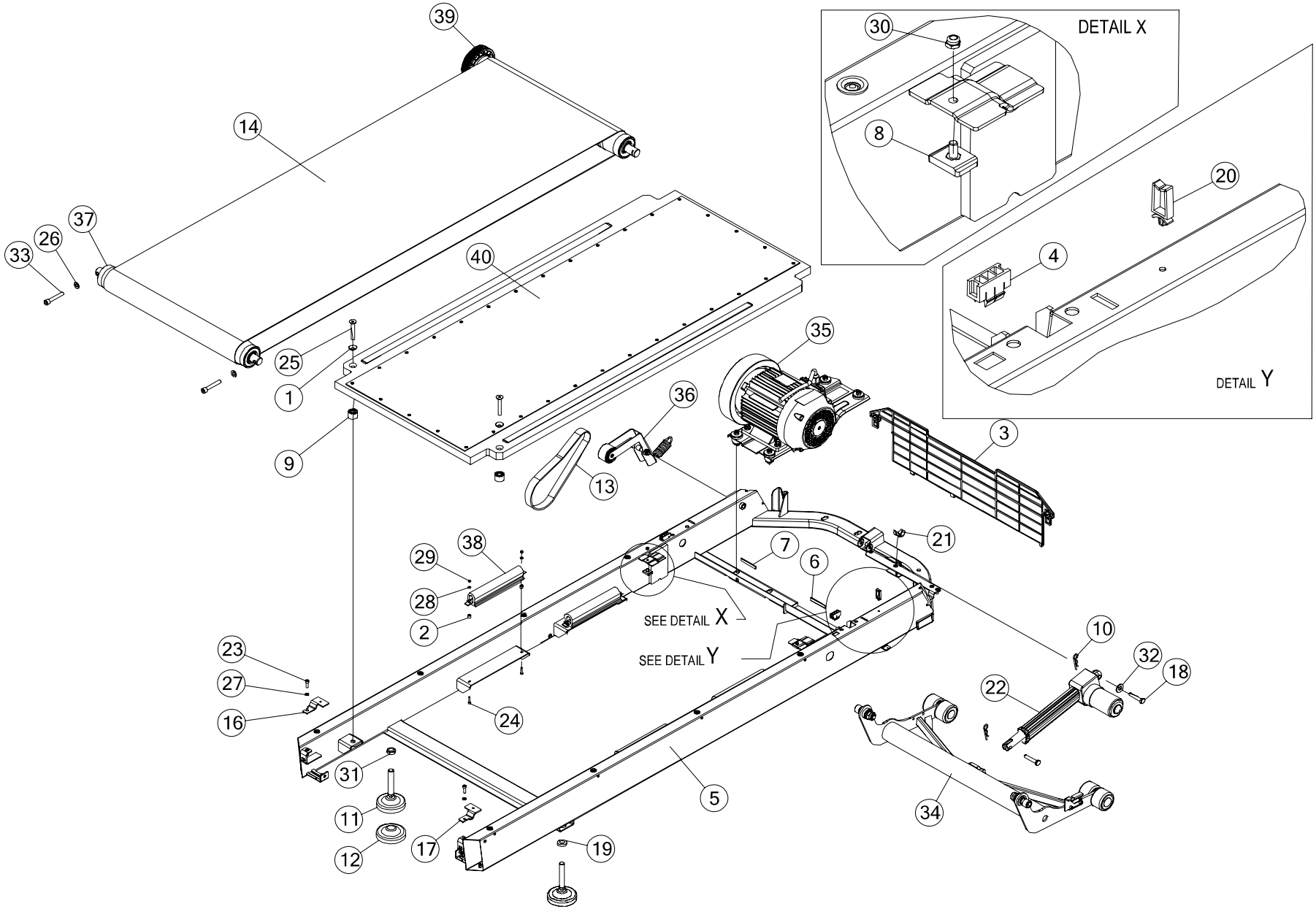

TECHNOGYM
The Wellness Company

FRAME

DAK2EL / DAK2AL / DAK2UL / DAK22L / DAK21L / DAK3EL / DAK3AL / DAK3UL / DAK32L / DAK31L - 1.2

Technogym® copyright – restricted document – copy forbidden

Pos	Code	Description	Specification	N	Q.ty
1	S0B002613AA	CONICAL WASHER	/		2
2	S0B000714AB	SPACER	/		8
3	S0C001284AB-NR	DUST GUARD	/		1
4	S0C001543AB	PLUG STOP	/		2
5	S0D002944AJ	FRAME	/		1
6	S0G0069	ANTI-VIBRATION	THICKNESS 10X2		0
7	S0G0069	ANTI-VIBRATION	THICKNESS 10X2		0
8	S0G001167AB-NR	RUBBER STOP	/		2
9	S0G001172AA-GG	SPACER	/		2
10	S0K000183	SPLIT PIN	d.2.5		2
11	S0K000161AC	FOOT	M16x100 d.85		2
12	S0K000357AA	FOOT	d.85		2
13	S0K000510AA	BELT	/		1
14	S0K000578AC	TREAD BELT	220VAC - D***E* / D***2*		1
14	S0K000960AA	TREAD BELT	MULTIVOLTAGE - D***A* / 110VAC - D***1*		1
16	S0N000799AB	PLATE	/		1
17	S0N000801AB	PLATE	/		1
18	S0P000304	PIN	d.10x50		2
19	S0Z429	NUT	M16 Zn (24 w.)		1
20	S0WB00060	CABLE DUCT	/		1
21	S0WR00660AB	RIVET	/		1
22	S0WR00873AC	ACTUATOR	/		1
23	S0Z104	BOLT	M6x20 8.8 (5 h.w.)		2
24	S0Z133	BOLT	M4X20 8.8 (3 H.W)		8
25	S0Z224	BOLT	M10x65 10.9 (6 h.w.)		2

Technogym® copyright – restricted document – copy forbidden

Pos	Code	Description	Specification	N	Q.ty
26	S0Z306	WASHER	10.5X21X2 ZN		2
27	S0Z326	LOCKING WASHER	6.4x11.4x1.6		2
28	S0Z343	WASHER	4.3x9x0.8 Zn		8
29	S0Z401	SELF-LOCKING NUT	M4 (7 w.)		8
30	S0Z423	SELF-LOCKING NUT	M5 (8 W.)		2
31	S0Z429	NUT	M16 Zn (24 w.)		1
32	S0ZR00019	WASHER	13x27x2.5		1
33	S0ZV00133AC	BOLT	M10x60 TF 8.8 (8 h.w.)		2
34	H0004034	See table ELEVATION CARRIAGE	/		1
35	H0004109	See table TREAD BELT MOTOR	/		1
36	H0004602	See table BELT TENSIONER	/		1
37	ST0000741AA	REAR ROLLER	/		1
38	SR0006884AA	SHOCK ABSORBER (SET)	4 PIECES IN THE KIT		1
39	ST0000740AA	FRONT ROLLER	/		1
40	ST0000481AD	RUNNING DECK (ASSY)	JOG		1

Technogym® copyright – restricted document – copy forbidden

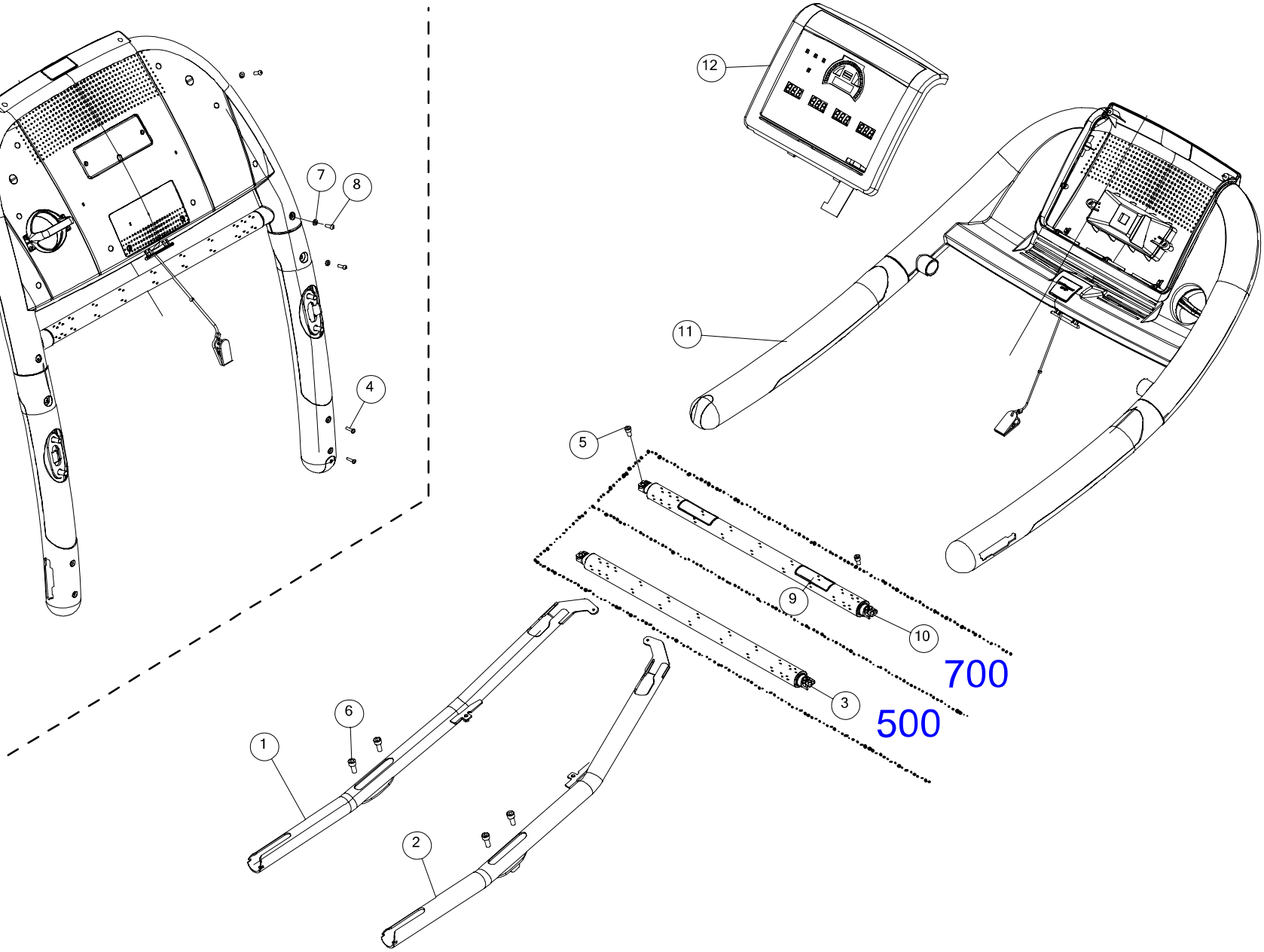

TECHNOGYM
The Wellness Company

DASHBOARD [500/700]

DAK2EL / DAK2AL / DAK2UL / DAK22L / DAK21L / DAK3EL / DAK3AL / DAK3UL / DAK32L / DAK31L - 1.2

Technogym® copyright – restricted document – copy forbidden

Pos	Code	Description	Specification	N	Q.ty
1	S0D004128AB	LEFT HANDLEBAR FRAME	/		1
2	S0D004129AB	RIGHT HANDLEBAR FRAME	/		1
3	S0N000839AA-GG	CENTRAL HANDLEBAR WITHOUT HS	/		1
4	S0Z000090AA	SELF-THREADING SCREW	5x20 (Ph)		4
5	S0Z117	BOLT	M8x16 8.8 (6 h.w)		2
6	S0Z125	BOLT	M10X25 8.8 (8 H.W.)		4
7	S0Z332	BLACK WASHER	6.4x12x1.6		6
8	S0ZV00008	BOLT	M6x20 10.9 (4 h.w.)		6
9	SR0006673AA	HAND SENSOR (SET)	/		2
10	SW0004084AA-GG	CENTRAL HANDLEBAR (ASSY)	/		1
11	H0006889	See table DASHBOARD CASING	/		1
12	H0006898	See table DISPLAY [500/700]	/		1

Technogym® copyright – restricted document – copy forbidden

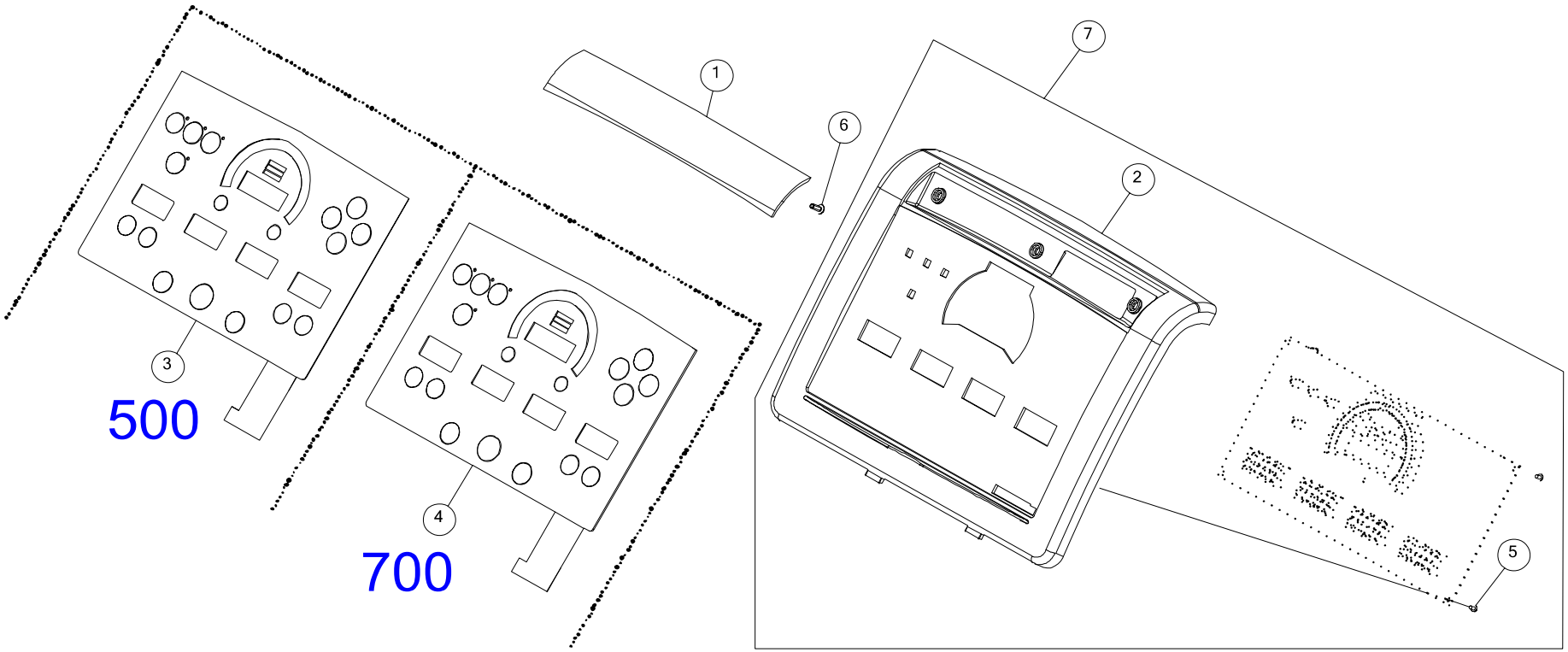

Technogym® copyright – restricted document – copy forbidden

Pos	Code	Description	Specification	N	Q.ty
1	S0C001339AA-DQ	DISPLAY PLUG	/		1
2	S0C002101AB-GV	SHELL FOR DISPLAY	/		1
3	S0WT00107AA-RU	KEYBOARD 500 (RUSSIAN)	JOG		1
3	S0WT00107AA-DA	KEYBOARD 500 (DANISH)	JOG		1
3	S0WT00107AA-ES	KEYBOARD 500 (SPANISH)	JOG		1
3	S0WT00107AA-FR	KEYBOARD 500 (FRENCH)	JOG		1
3	S0WT00107AA-CN	KEYBOARD 500 (CHINESE)	JOG		1
3	S0WT00107AA-IT	KEYBOARD 500 (ITALIAN)	JOG		1
3	S0WT00107AA-NL	KEYBOARD 500 (DUTCH)	JOG		1
3	S0WT00107AA-TR	KEYBOARD 500 (TURKISH)	JOG		1
3	S0WT00107AB-DE	KEYBOARD 500 (GERMAN)	JOG		1
3	S0WT00107AA-JP	KEYBOARD 500 (JAPANESE)	JOG		1
3	S0WT00107AA-US	KEYBOARD 500 (US ENGLISH)	JOG		1
3	S0WT00107AA-BR	KEYBOARD 500 (PORTUGUESE)	JOG		1
3	S0WT00107AA-UK	KEYBOARD 500 (UK ENGLISH)	JOG		1
4	S0WT00108AA-CN	KEYBOARD 700 (CHINESE)	JOG		1
4	S0WT00108AA-DA	KEYBOARD 700 (DANISH)	JOG		1
4	S0WT00108AA-ES	KEYBOARD 700 (SPANISH)	JOG		1
4	S0WT00108AA-IT	KEYBOARD 700 (ITALIAN)	JOG		1
4	S0WT00108AA-JP	KEYBOARD 700 (JAPANESE)	JOG		1
4	S0WT00108AA-FR	KEYBOARD 700 (FRENCH)	JOG		1
4	S0WT00108AA-RU	KEYBOARD 700 (RUSSIAN)	JOG		1
4	S0WT00108AA-UK	KEYBOARD 700 (UK ENGLISH)	JOG		1
4	S0WT00108AA-NL	KEYBOARD 700 (DUTCH)	JOG		1
4	S0WT00108AB-DE	KEYBOARD 700 (GERMAN)	JOG		1

Technogym® copyright – restricted document – copy forbidden

Pos	Code	Description	Specification	N	Q.ty
4	S0WT00108AA-TR	KEYBOARD 700 (TURKISH)	JOG		1
4	S0WT00108AA-BR	KEYBOARD 700 (PORTUGUESE)	JOG		1
4	S0WT00108AA-US	KEYBOARD 700 (US ENGLISH)	JOG		1
5	S0Z7018	SELF-THREADING SCREW	3.5X6 (PH)		5
6	S0Z775	BLACK SELF-THREADING SCREW	5X14 (PH)		3
7	SW0006625AD	DISPLAY (ASSY)	/	rf	1

RF *If you replace the display, you have to use the new keyboard S0WT00149-*.*



other info in TN 2020/01

Technogym® copyright – restricted document – copy forbidden

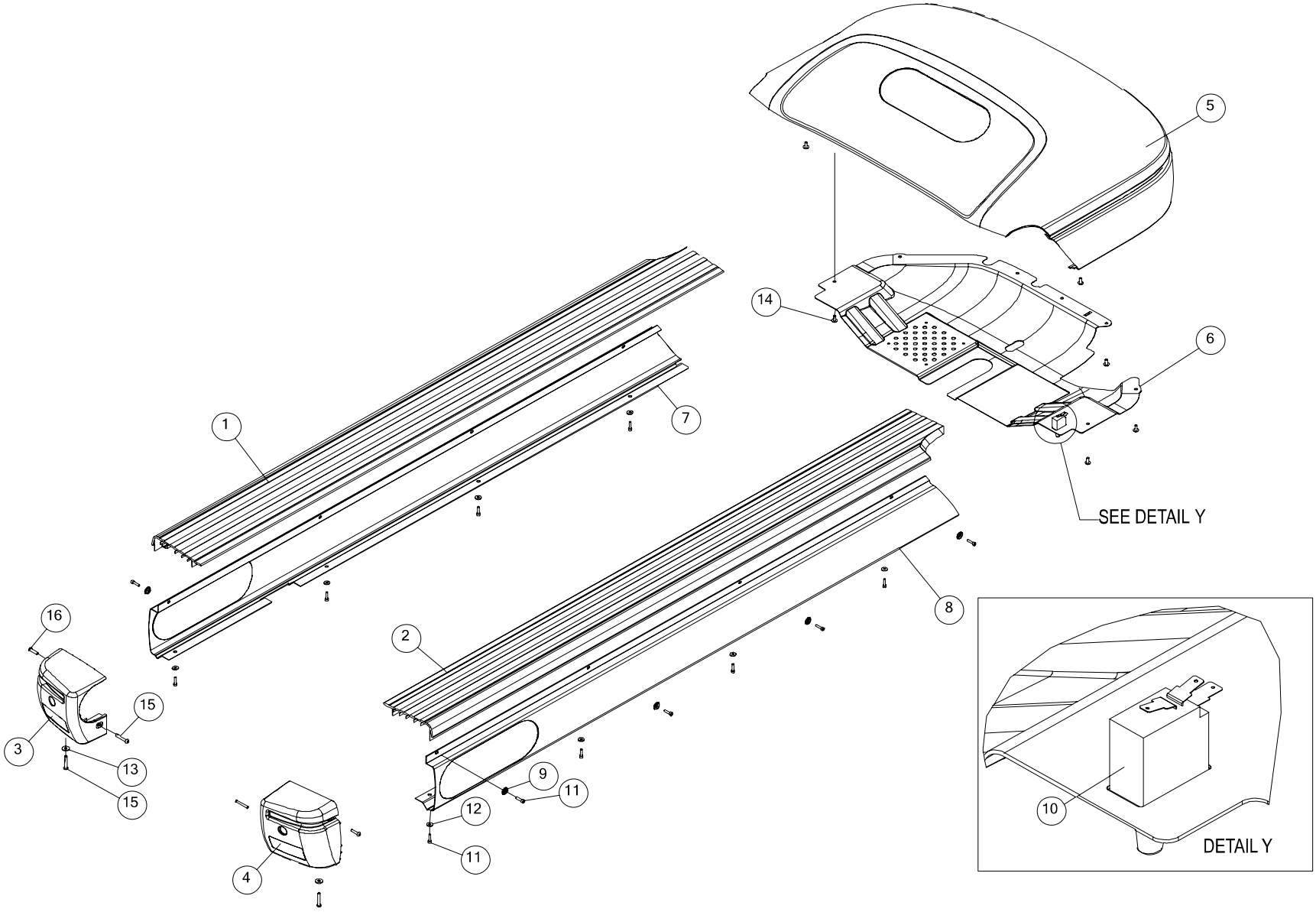

TECHNOGYM
The Wellness Company

CASING

DAK2EL / DAK2AL / DAK2UL / DAK22L / DAK21L / DAK3EL / DAK3AL / DAK3UL / DAK32L / DAK31L - 1.2

Technogym® copyright – restricted document – copy forbidden

Pos	Code	Description	Specification	N	Q.ty
1	S0C003311AA-GG	LEFT FOOT-REST	/		1
2	S0C003312AA-GG	RIGHT FOOT-REST	/		1
3	S0C001173AC-GG	LEFT REAR COVERING	/		1
4	S0C001174AC-GG	RIGHT REAR COVERING	/		1
5	S0C001367AB-DSDQ	UPPER CASING (BLACK-GREY)	/		1
5	S0C001367AB-DSDI	UPPER CASING (GREY-GREY)	/		1
6	S0C001369AB	FRONT LOWER CASING	/		1
7	S0D003150AC-GV	LEFT SIDE CASING (GREY)	/		1
8	S0D003151AC-GV	RIGHT SIDE CASING (GREY)	/		1
9	S0D003707AA	CONNECTION PLATE	/		8
10	S0WR00638AA	MICROSWITCH	/		1
11	S0Z134	BOLT	M4x16 8.8 (3 h.w)		16
12	S0Z301	WASHER	4.6x12.3x1.6		8
13	S0Z334	BLACK WASHER	5.5X15X1.6		2
14	S0Z761	BOLT	M5x12 8.8 (3 h.w.)		9
15	S0Z000084AA	BLACK BOLT	M5x30 (3 h.w.)		4
16	S0ZV00066	BOLT	M5x20 A2-70 (3 h.w.)		2

Technogym® copyright – restricted document – copy forbidden

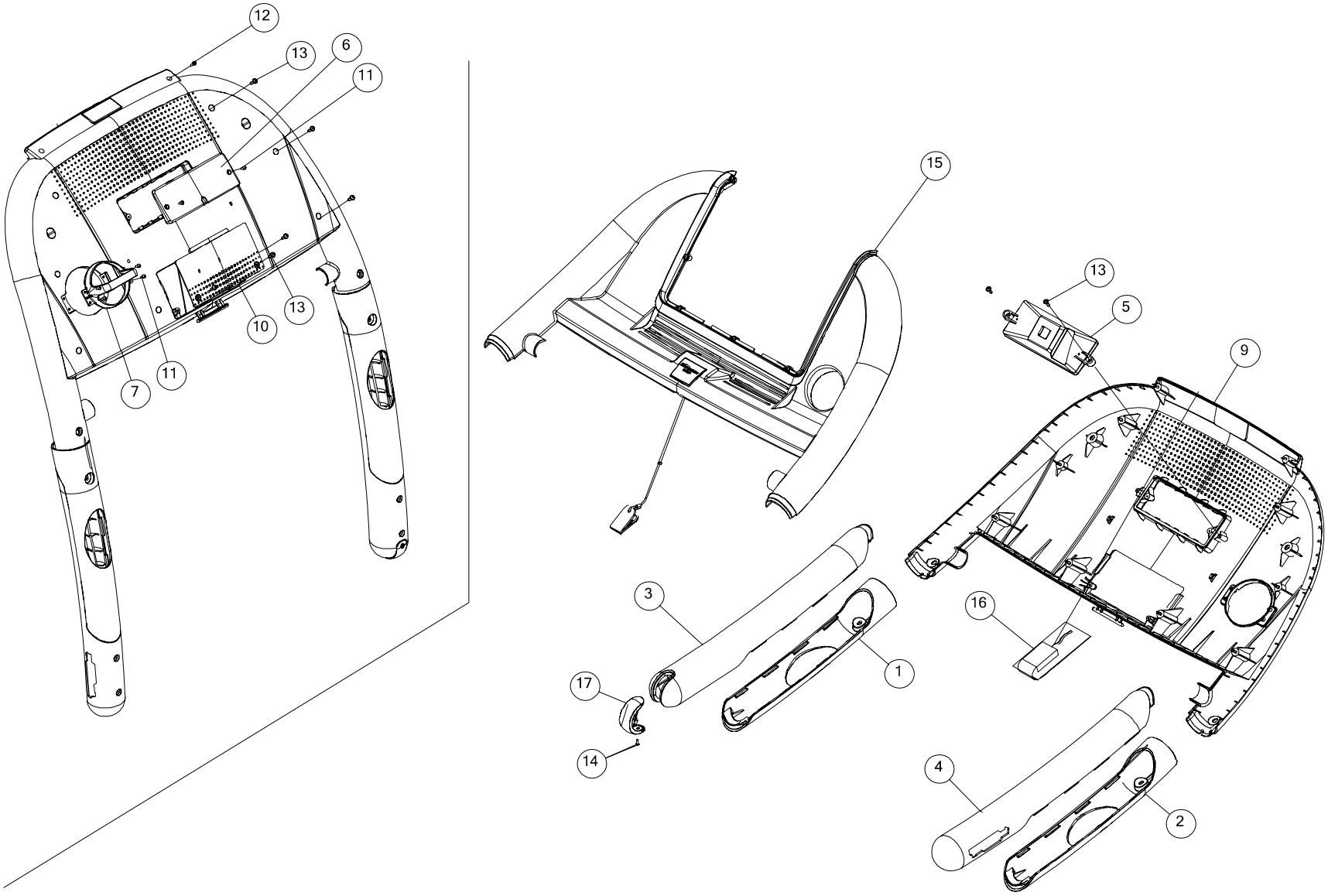

TECHNOGYM
The Wellness Company

DASHBOARD CASING

DAK2EL / DAK2AL / DAK2UL / DAK22L / DAK21L / DAK3EL / DAK3AL / DAK3UL / DAK32L / DAK31L - 1.2

Technogym® copyright – restricted document – copy forbidden

Pos	Code	Description	Specification	N	Q.ty
1	S0C001212AA-GG	LEFT UPPER COVER	/		1
2	S0C001233AA-GG	RIGHT LOWER COVER	/		1
3	S0C001238AA-GG	LEFT HANDLEBAR	/		1
4	S0C001255AA-GG	RIGHT HANDLEBAR	/		1
5	S0C001386AA-GG	CASING	/		1
6	S0C001393AA-GG	PLUG	/		1
7	S0C001508AA-GG	WATER BOTTLE SUPPORT	/		1
9	S0C001979AC-GG	LOWER DASHBOARD	/		1
10	S0C002108AA-GG	PLUG	/		1
11	S0Z000316AA	SELF-THREADING SCREW	6x20 A-2		6
12	S0Z733	SCREW	M4x12 (Ph)		2
13	S0Z775	BLACK SELF-THREADING SCREW	5X14 (PH)		12
14	S0ZV00258AA	SELF-THREADING SCREW	3.5x10 (Ph)		1
15	SW0006867AD	UPPER DASHBOARD (ASSY)	/		1
16	H0007050old	See table RECEIVER	/		1
17	S0C001547AA-GG	CASING [500]	/		1
17	SR0006683AA	INMOTION ASSEMBLY FOR 700	/		1

Technogym® copyright – restricted document – copy forbidden

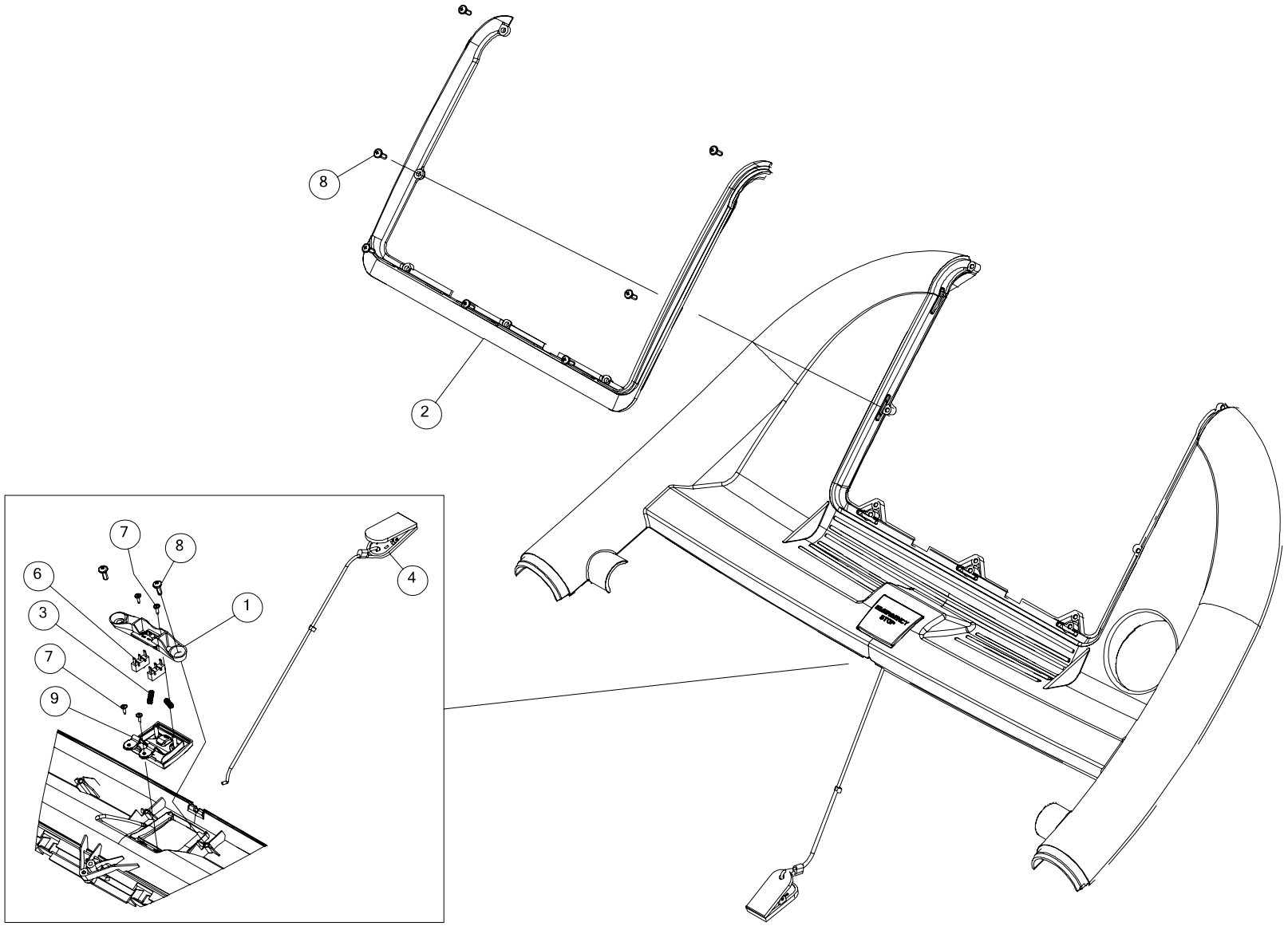

TECHNOGYM
The Wellness Company

UPPER DASHBOARD (ASSY)

DAK2EL / DAK2AL / DAK2UL / DAK22L / DAK21L / DAK3EL / DAK3AL / DAK3UL / DAK32L / DAK31L - 1.2

Technogym® copyright – restricted document – copy forbidden

Pos	Code	Description	Specification	N	Q.ty
1	S0C001385AB	EMERGENCY BUTTON FIX BRACKET	/		1
2	S0C002109AA-GG	SHELL FOR DISPLAY	UNITYand VISIO		1
2	S0C002110AA-GG	SHELL FOR DISPLAY	LED		1
3	S0M000108AA	COMPRESSION SPRING	L=24		2
4	S0R000071AC-GG	CABLE WITH CLAMP	/		1
6	S0WR00294	MICROSWITCH	/		2
7	S0Z000196AA	SELF-THREADING SCREW	2.5x10		4
8	S0Z775	BLACK SELF-THREADING SCREW	5X14 (PH)		9
9	SR0005425AA	EMERGENCY BUTTON SUPPORT (SET)	/		1

Technogym® copyright – restricted document – copy forbidden

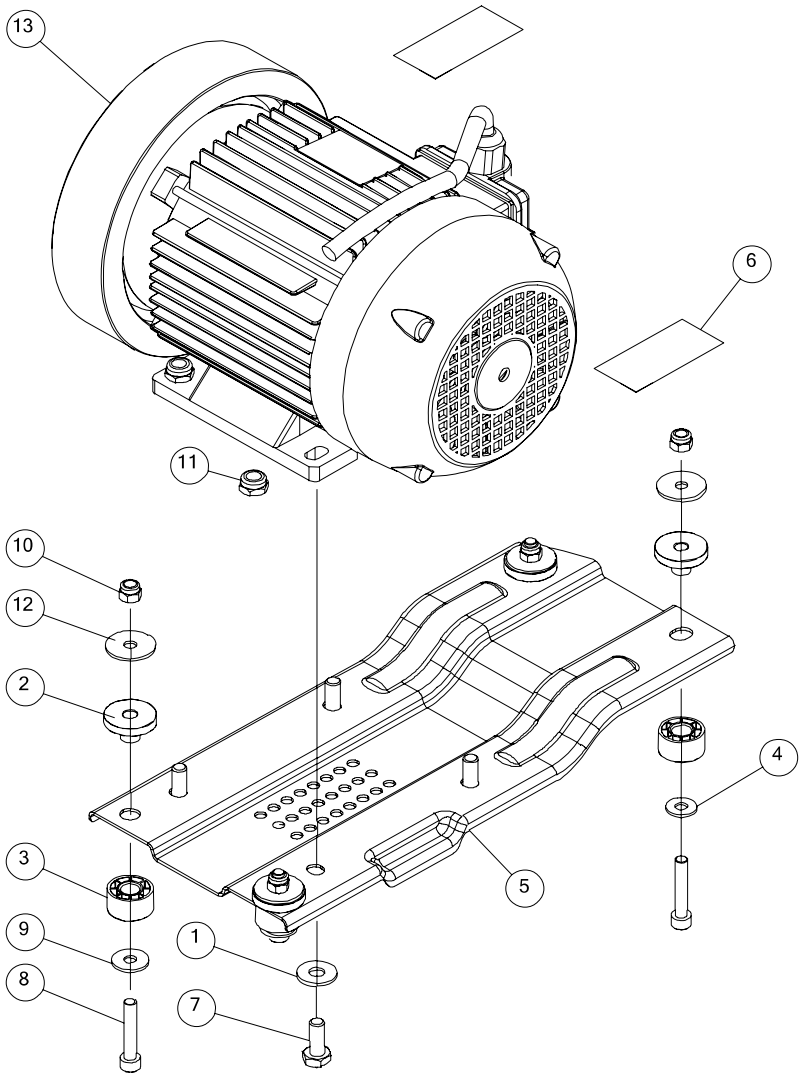

Technogym® copyright – restricted document – copy forbidden

Pos	Code	Description	Specification	N	Q.ty
1	S0B000736AA	WASHER	40.5x26x2		4
2	S0B001322AA-GG	BUSHING	/		4
3	S0B001325AA-GG	SPACER	/		4
4	S0B001894AA	WASHER	8.4x20x2		2
5	S0D003153AB	SUPPORT PLATE	/		1
6	S0EKD004	WHITE HIGH-POWER STICKER	8.5x4		2
7	S0Z036	BOLT	M10x30 8.8 (17 w.)		4
8	S0Z005	BOLT	M8X45 8.8 (13 W.)		4
9	S0Z305	WASHER	8.5X24X2 ZN		2
10	S0Z403	SELF-LOCKING NUT	M8 (13 w.)		4
11	S0Z415	SELF-LOCKING NUT	M10 ZN (17 W.)		4
12	S0ZR00017	WASHER	8.4x32x2		4
13	SN0000098AA	TREAD BELT MOTOR	1.8 KW		1

Technogym® copyright – restricted document – copy forbidden

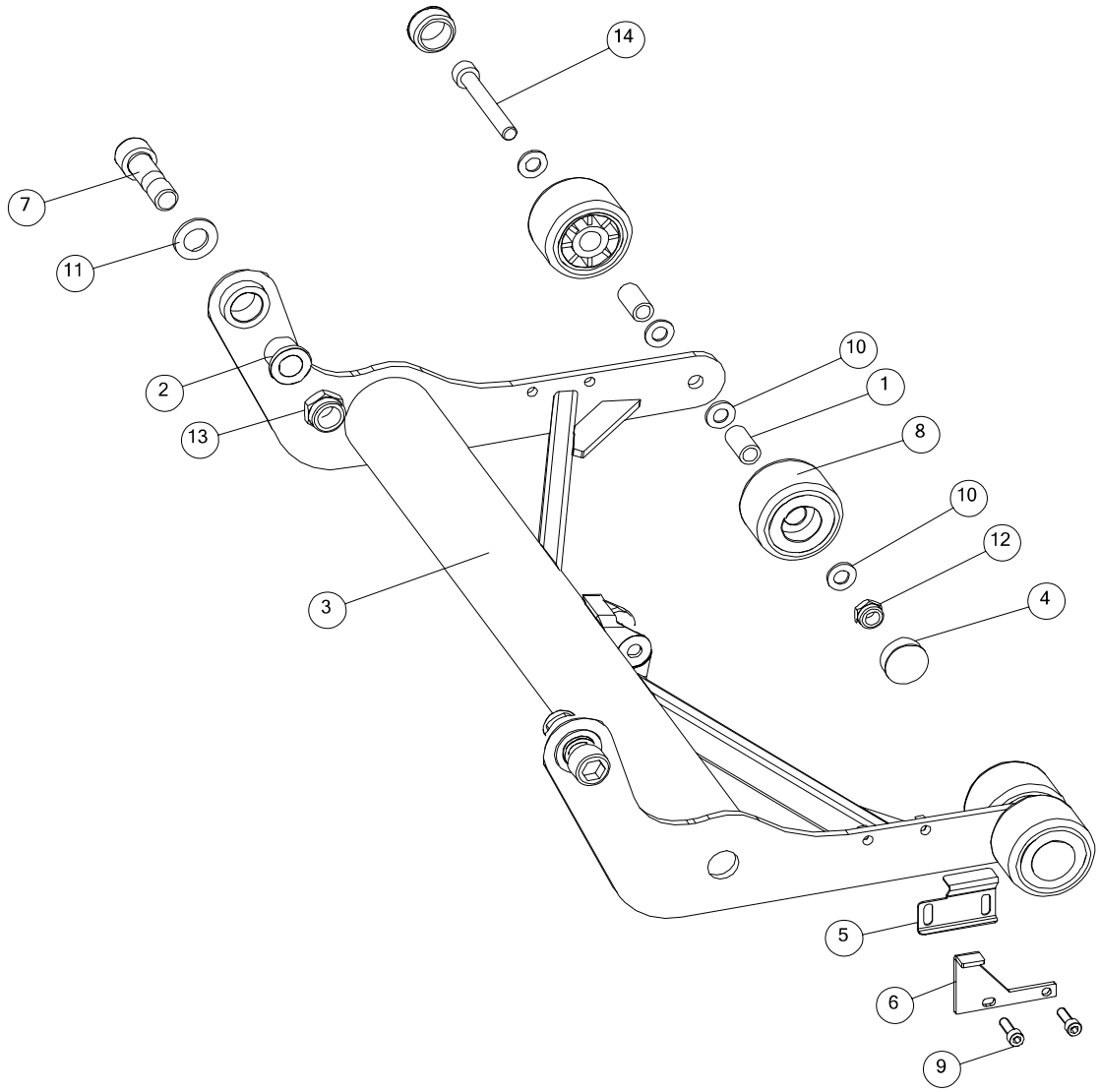

TECHNOGYM
The Wellness Company

ELEVATION CARRIAGE

DAK2EL / DAK2AL / DAK2UL / DAK22L / DAK21L / DAK3EL / DAK3AL / DAK3UL / DAK32L / DAK31L - 1.2

Technogym® copyright – restricted document – copy forbidden

Pos	Code	Description	Specification	N	Q.ty
1	S0B000083	SPACER	10.2x14.5x28		4
2	S0B000444	BUSHING	/		2
3	S0D002955AD	ELEVATION CARRIAGE	/		1
4	S0G000030-NR	PLUG	d.30		4
5	S0N000713AB	PLATE	/		1
6	S0N001881AC	BRACKET	/		1
7	S0P001051AB	BOLT	M16x53 (14 h.w.)		2
8	S0U316AA-GG	WHEEL	/		4
9	S0Z138	BOLT	M6x20 8.8 ZN U5931 (5 h.w)		2
10	S0Z306	WASHER	10.5X21X2 ZN		4
11	S0Z308	WASHER	17x30x3		2
12	S0Z415	SELF-LOCKING NUT	M10 ZN (17 W.)		2
13	S0Z433	SELF-LOCKING NUT	M16 (24 w.) Z		2
14	S0ZV00070	BOLT	M10x80 8.8 (8 h.w.)		2

Technogym® copyright – restricted document – copy forbidden

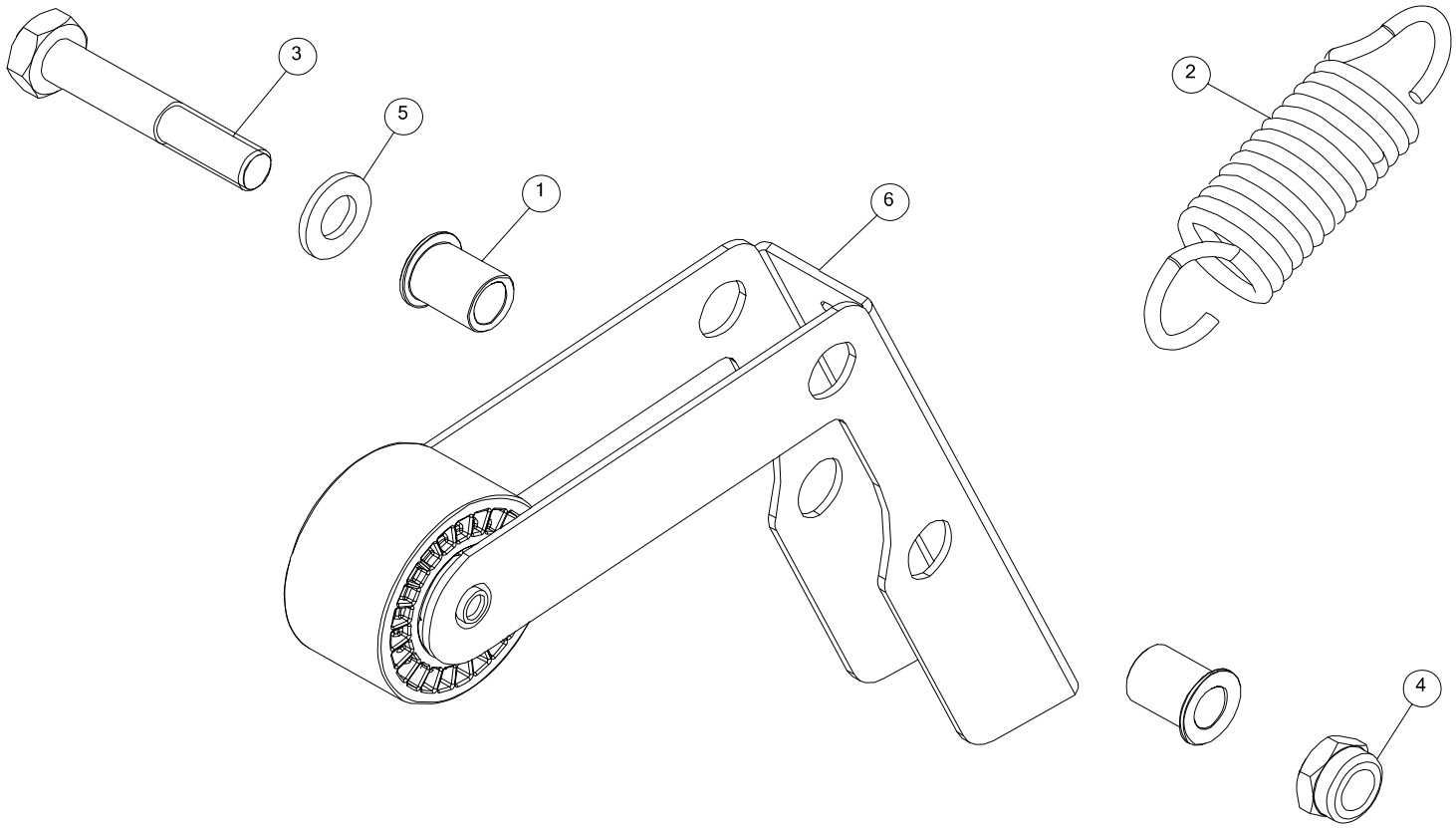

Technogym® copyright – restricted document – copy forbidden

Pos	Code	Description	Specification	N	Q.ty
1	S0B000637AA	BUSHING	/		0
2	S0M000079AA	TENSIONER SPRING	/		0
3	S0Z022	BOLT	M10x60 8.8 (17 w.)		0
4	S0Z415	SELF-LOCKING NUT	M10 ZN (17 W.)		0
5	S0Z3003	WASHER	10.5X21X2		0
6	ST0000554AB	BELT TENSIONER	/		0

Technogym® copyright – restricted document – copy forbidden

!Note!
99

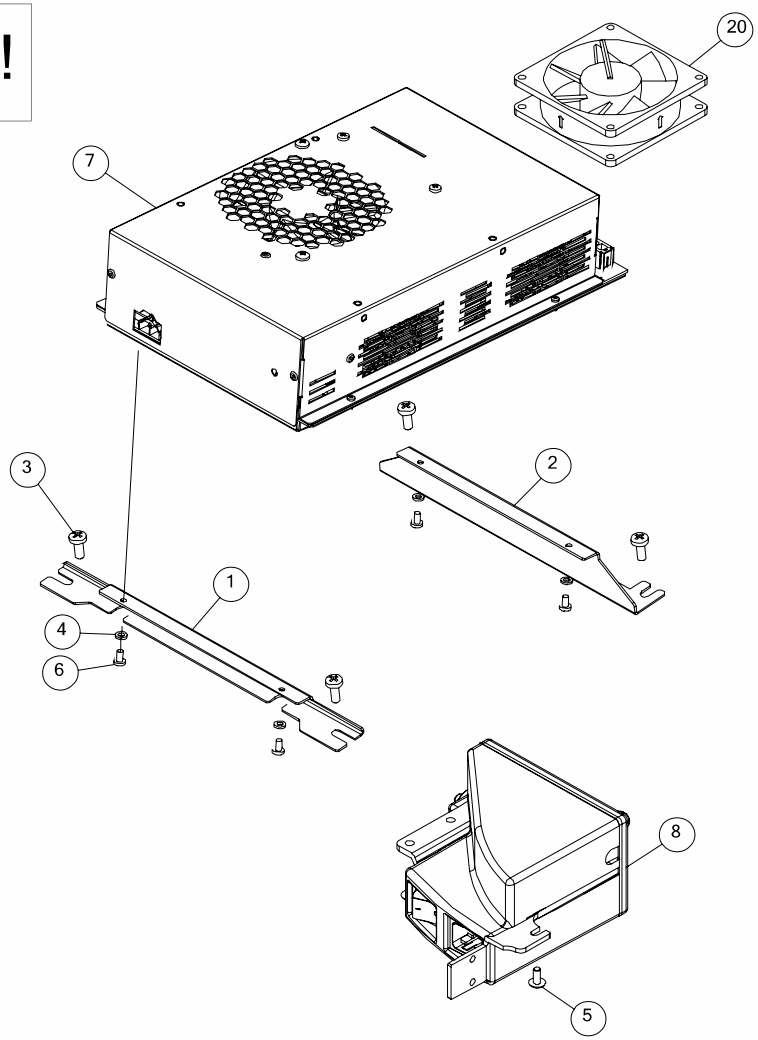

Technogym® copyright – restricted document – copy forbidden

Pos	Code	Description	Specification	N	Q.ty
1	S0D005261AA	BRACKET	/		1
2	S0D005262AA	BRACKET	/		1
3	S0Z000089AA	SCREW	M6x16		4
4	S0Z329	EXT. NOTCHED WASHER	4.3x8x1.5 Zn		4
5	S0Z761	BOLT	M5x12 8.8 (3 h.w.)		3
6	S0ZV00152AA	SCREW	M4X8 (PH)		4
7	ST0000107AN	ALE-WIN DRIVER BOX	220V - D***E*		1
7	ST0000175AK	ALE-WIN DRIVER BOX	MULTIVOLTAGE - D***A*		1
8	ST0000215AD	ALE-WIN POWER SUPPLY BOX	/		1
20	S0WR01050AA	FAN	/		1
99	SEENOTE	SEE NOTE	/	ih2	0

	WARNING - NOTA
ih 2	Table for... - Tavola per... **EXCITE** **DAK2EL (500)**: DAK2EL13000462 up to all S.N. **DAK2AL (500-multivoltage)**: all S.N. **DAK3EL (700)**: DAK3EL13000210 up to all S.N. **DAK3AL (700-multivoltage)**: all S.N. **DAK3EY (Visio Capacitive)**: DAK3EY13000239 up to all S.N. **DAK3EV (Unity)**: all S.N. **DAK3AV (Unity-multivoltage)**: all S.N. --- **FORMA** **DDJ5EL / DDJ5AL**: all S.N.

Technogym® copyright – restricted document – copy forbidden

!Note!
99

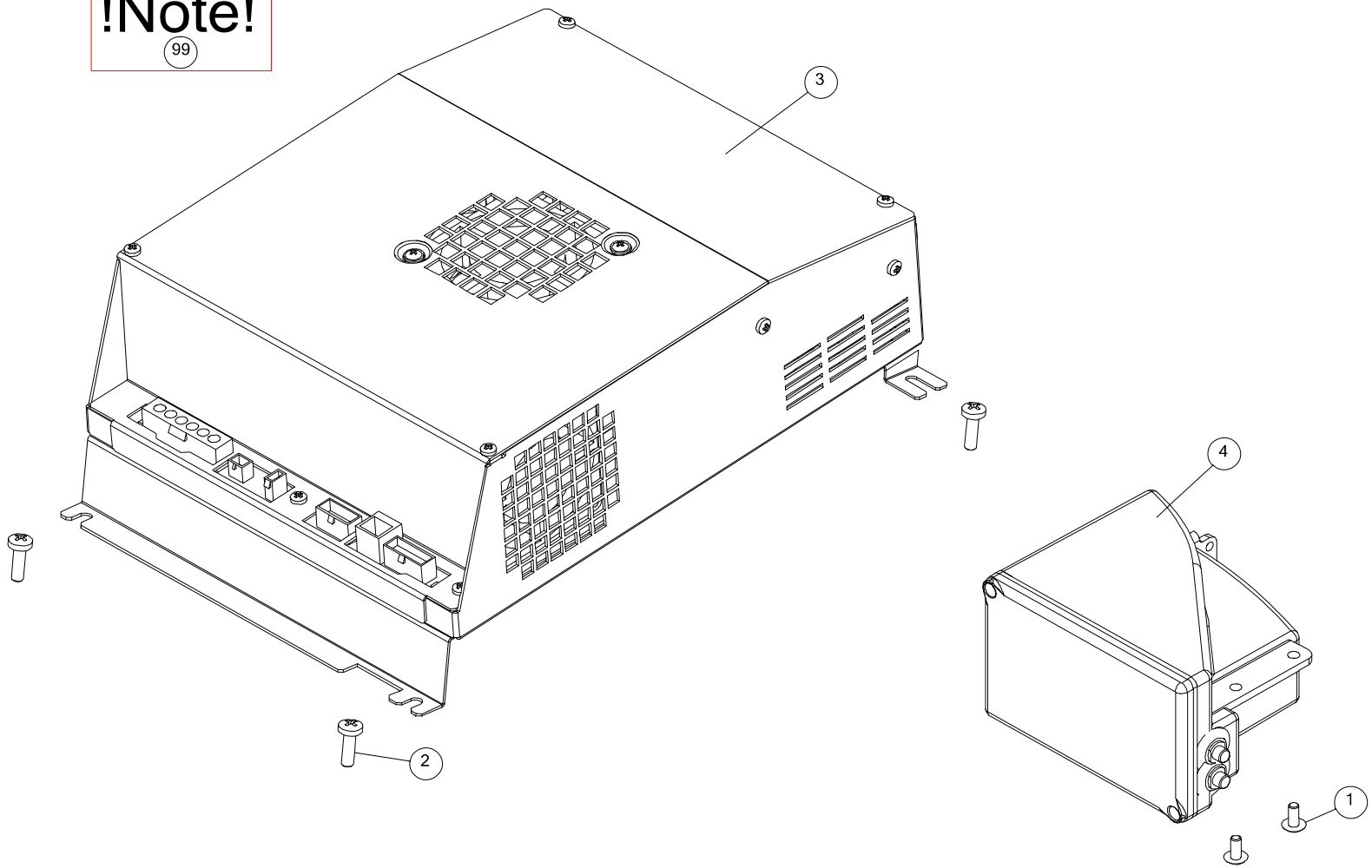

Technogym® copyright – restricted document – copy forbidden

Pos	Code	Description	Specification	N	Q.ty
1	S0Z761	BOLT	M5x12 8.8 (3 h.w.)		3
2	S0ZV00143AA	SCREW	M6x20		4
3	SR0007131AA	ASSEMBLY KIT (ALE-WIN)	Jog Now	ih4	1
3	ST0000017AA	ALE-MET DRIVER BOX	/		1
4	SW0005759AB	POWER SUPPLY BOX	220V (16A) JOG		1
4	SW0004845AB	POWER SUPPLY BOX	110V (20A) JOG		1
99	SEENOTE	SEE NOTE	/	ih3	1

ih 3

WARNING - NOTA

Table for... - Tavola per...

EXCITE

DAK2EL (500): all S.N. up to DAK2EL13000461
DAK2UL (500): all S.N.
DAK22L (500): all S.N.
DAK21L (500): all S.N.
DAK3EL (700): all S.N. up to DAK3EL13000209
DAK3UL (700): all S.N.
DAK32L (700): all S.N.
DAK31L (700): all S.N.
DAK3EY (Visio Capacitive): all S.N. up to DAK3EY13000238
DAK32Y (Visio Capacitive): all S.N.
DAK31Y (Visio Capacitive): all S.N.
DAK3*W (Visio Resistive): all S.N.
DAK3*C (Visio Resistive): all S.N.
DAK32V (Unity): all S.N.
DAK31V (Unity): all S.N.

FORMA

DDJ51L / DDJ52L: all S.N.

ih 4

WARNING - NOTA

Code for... - Codice per...

DAK*U*

Technogym® copyright – restricted document – copy forbidden

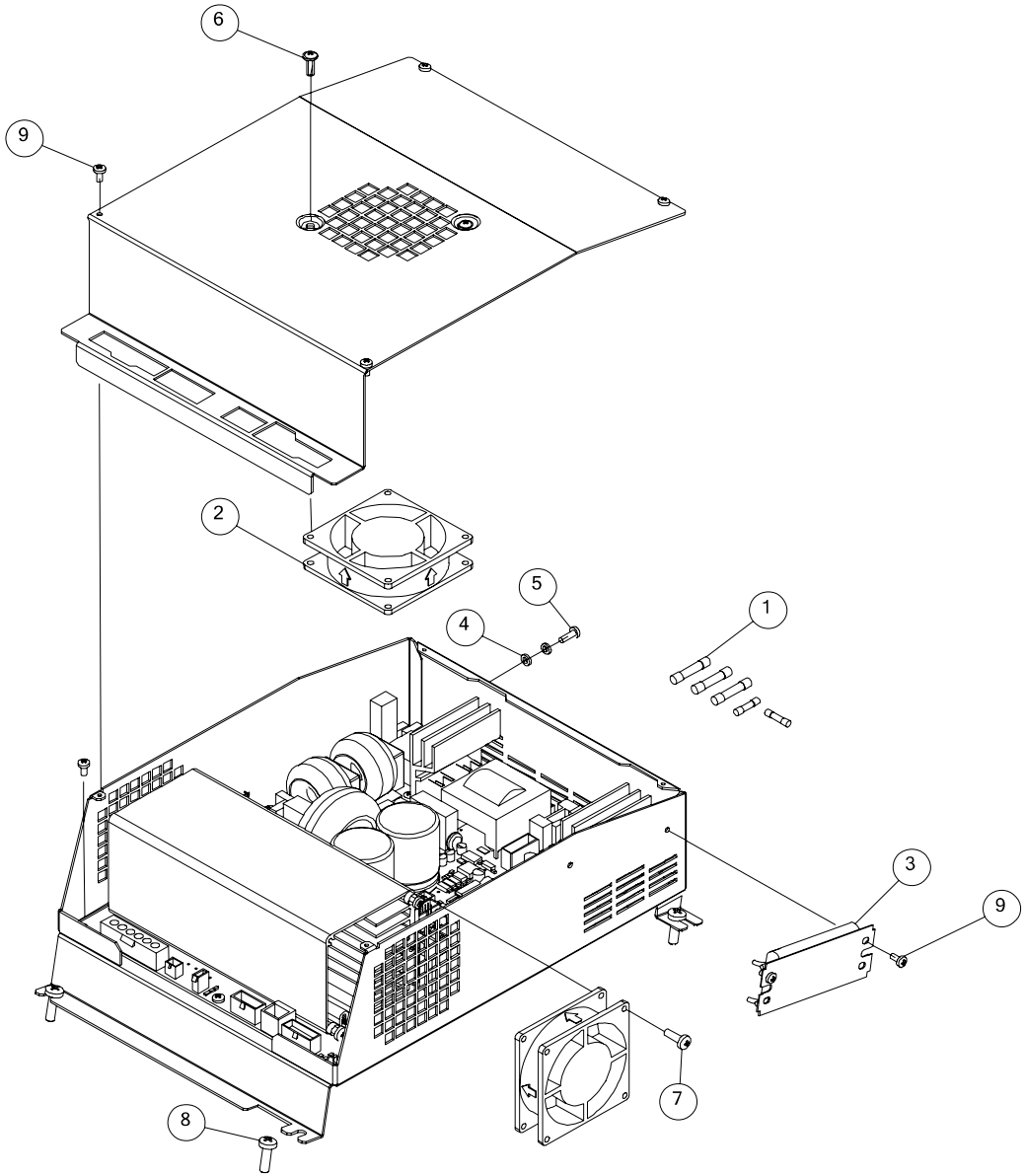

Technogym® copyright – restricted document – copy forbidden

Pos	Code	Description	Specification	N	Q.ty
1	SR0006889AA	FUSE (SET)	/		1
2	S0WR00683AA	FAN	/		2
3	S0WR00684AA	RESISTANCE	150 OHM		1
4	S0Z329	EXT. NOTCHED WASHER	4.3x8x1.5 Zn		2
5	S0Z733	SCREW	M4x12 (Ph)		1
6	S0Z775	BLACK SELF-THREADING SCREW	5X14 (PH)		2
7	S0Z000179AA	SCREW	M4x14		2
8	S0ZV00143AA	SCREW	M6x20		4
9	S0ZV00152AA	SCREW	M4X8 (PH)		14

Technogym® copyright – restricted document – copy forbidden

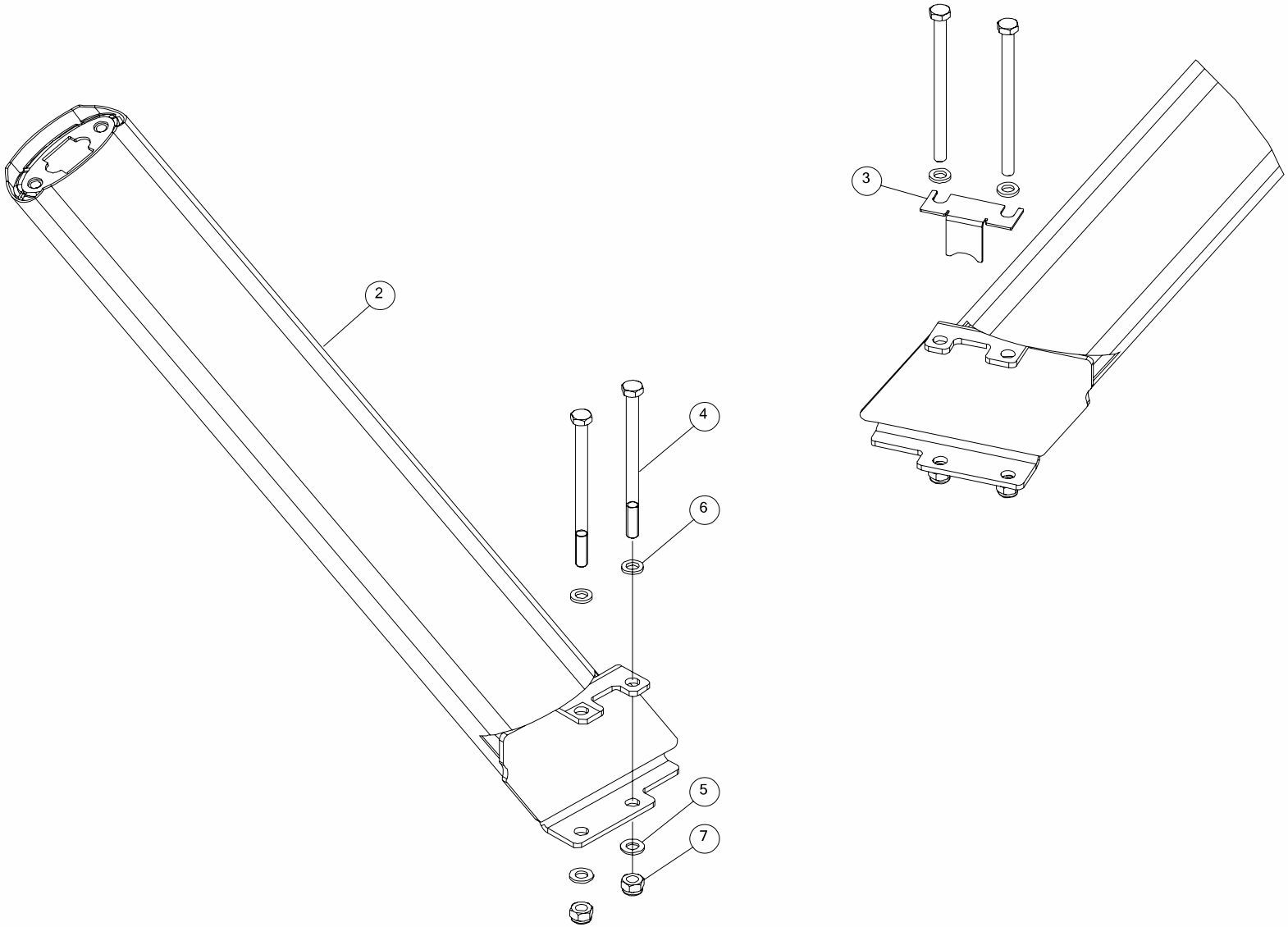

Technogym® copyright – restricted document – copy forbidden

Pos	Code	Description	Specification	N	Q.ty
2	S0D002984AC-AN	LEFT UPRIGHT (ANTHRACITE)	/		1
2	S0D002983AC-AL	RIGHT UPRIGHT (SILVER)	/		1
2	S0D002984AC-ED	LEFT UPRIGHT (SILVER)	/		1
2	S0D002983AC-AN	RIGHT UPRIGHT (ANTHRACITE)	/		1
3	SR0007059AA	PLATE (SET)	/		1
4	S0Z027	BOLT	M10X150 8.8 (17 W.)		4
5	S0Z306	WASHER	10.5X21X2 ZN		4
6	S0Z351	EXT. NOTCHED WASHER	10.5X18X2.7		4
7	S0Z404	SELF-LOCKING NUT	M10 (17 W.)		4

Technogym® copyright – restricted document – copy forbidden

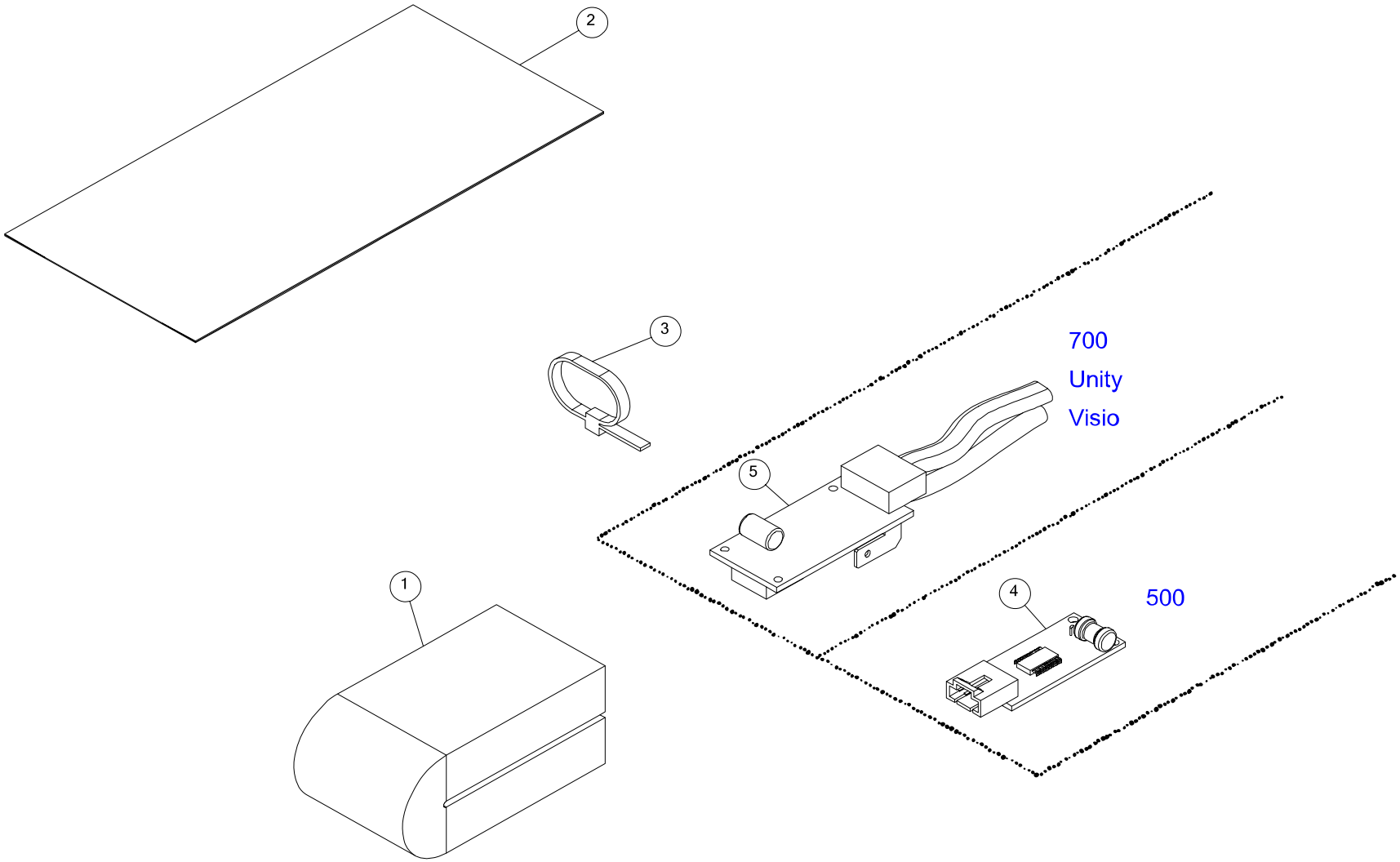

Technogym® copyright – restricted document – copy forbidden

Pos	Code	Description	Specification	N	Q.ty
1	S0G000218	SPONGE	/		1
2	S0J354	PLASTIC BAG	70x150		1
3	S0V251	CABLE TIE	L. 141		1
4	SN0000034AB	CB RECEIVER	/		1
5	SN0000037AB	COMBO RECEIVER	Unity 3 BioCircuit		1

Technogym® copyright – restricted document – copy forbidden

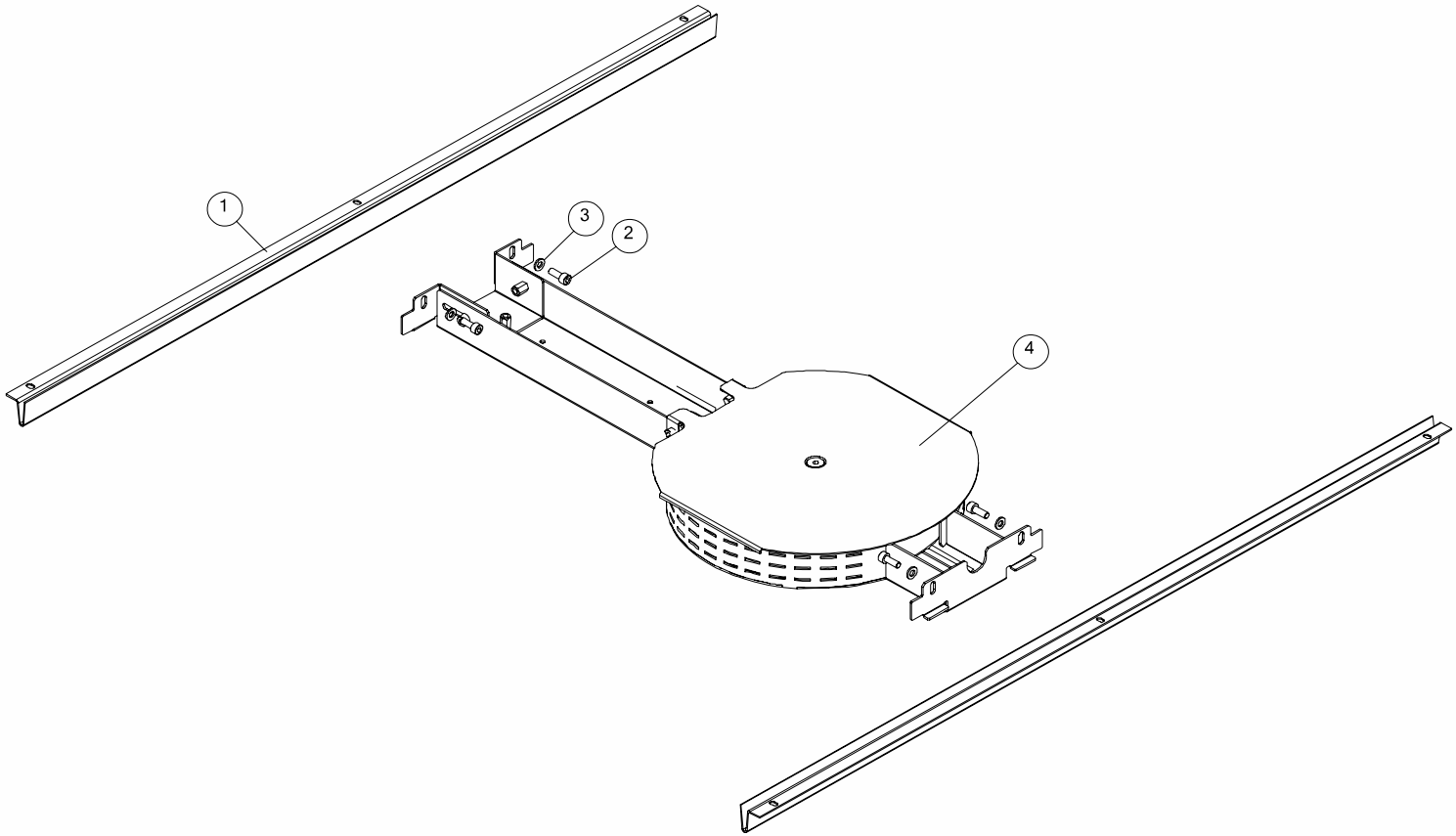

Technogym® copyright – restricted document – copy forbidden

Pos	Code	Description	Specification	N	Q.ty
1	S0N001481AB	BRACKET	/		2
2	S0Z121	BOLT	M6x16 8.8 Zn (5 h.w.)		4
3	S0Z303	WASHER	6.4X12X1.6		4
4	ST0000008AA	AUTOTRANSFORMER	/		1

Technogym® copyright – restricted document – copy forbidden

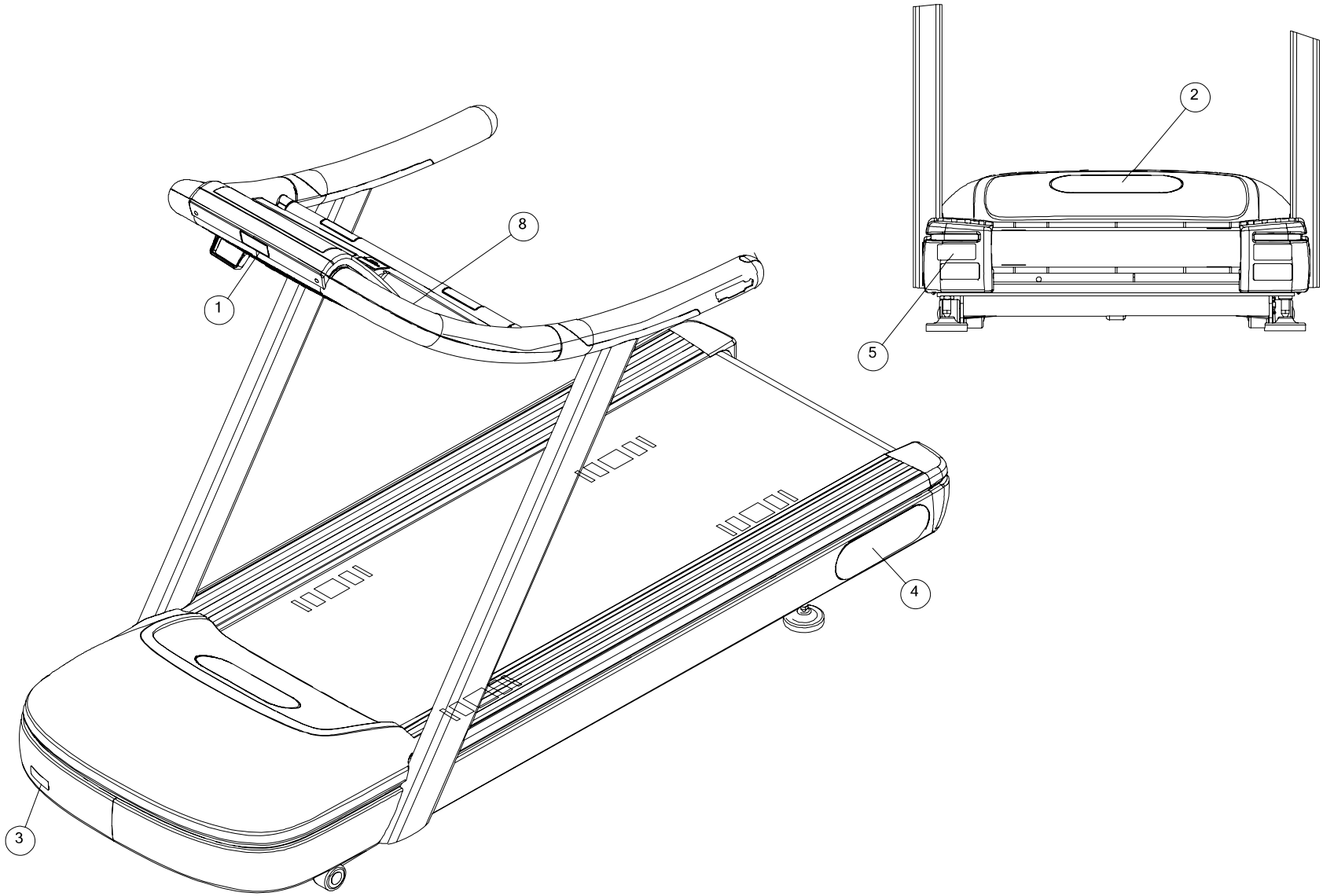

TECHNOGYM
The Wellness Company

STICKER

DAK2EL / DAK2AL / DAK2UL / DAK22L / DAK21L / DAK3EL / DAK3AL / DAK3UL / DAK32L / DAK31L - 1.2

Technogym® copyright – restricted document – copy forbidden

Pos	Code	Description	Specification	N	Q.ty
1	S0E000344AA-DL	TECHNOGYM STICKER	34x79		1
2	S0E002170AA-GZ	TECHNOGYM PLATE (GREY)	279x93		1
3	S0E000505AA	ON/OFF SWITCH STICKER	/		1
4	S0E000915AA	TECHNOGYM PLATE (GREY)	/		2
5	0E000950AA	ITEM NOT AVAILABLE	Sticker JOG		2
5	0E000937AA	ITEM NOT AVAILABLE	REAR STICKER 500		2
8	S0E001875AB-UK	WARNING STICKER (UK ENGLISH)	/		1
8	S0E001875AA-NL	WARNING STICKER (DUTCH)	/		1
8	S0E001875AA-PT	WARNING STICKER (PORTUGUESE)	/		1
8	S0E001875AA-AR	WARNING STICKER (ARABIC)	/		1
8	S0E001875AA-FR	WARNING STICKER (FRENCH)	/		1
8	S0E001875AA-JP	WARNING STICKER (JAPANESE)	/		1
8	S0E001875AA-SV	WARNING STICKER (SWEDISH)	/		1
8	S0E001875AA-RU	WARNING STICKER (RUSSIAN)	/		1
8	S0E001875AA-TR	WARNING STICKER (TURKISH)	/		1
8	S0E001875AA-DA	WARNING STICKER (DANISH)	/		1
8	S0E001875AA-IT	WARNING STICKER (ITALIAN)	/		1
8	S0E001875AA-DE	WARNING STICKER (GERMAN)	/		1
8	S0E001875AA-ZH	WARNING STICKER (CHINESE)	/		1
8	S0E001875AA-FI	WARNING STICKER (FINNISH)	/		1
8	S0E001875AA-NV	WARNING STICKER (NORWEGIAN)	/		1
8	S0E001875AA-ES	WARNING STICKER (SPANISH)	/		1

Technogym® copyright – restricted document – copy forbidden

1

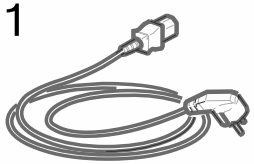

2

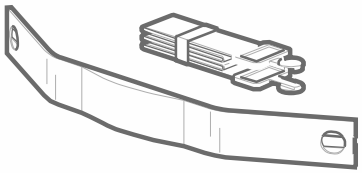

3

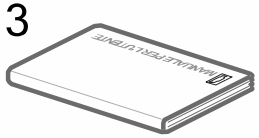

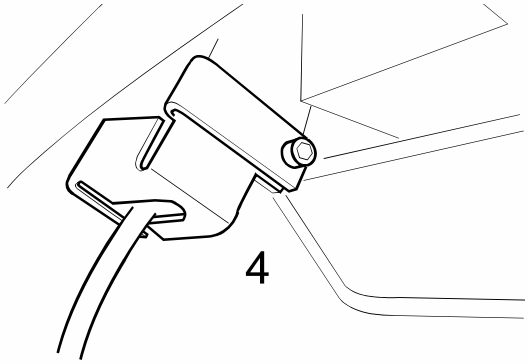

5

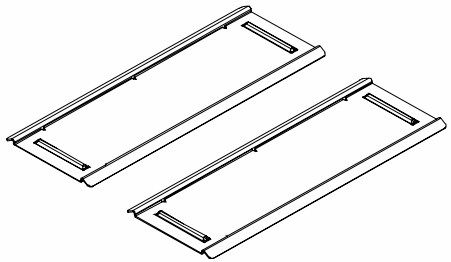

6

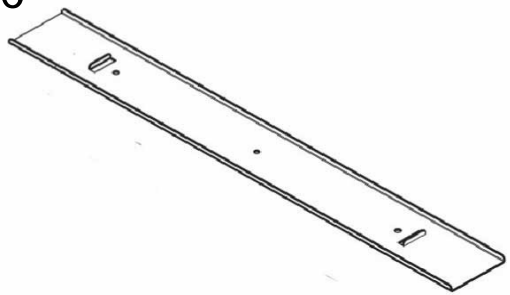

7

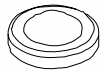

Technogym® copyright – restricted document – copy forbidden

Pos	Code	Description	Specification	N	Q.ty
1	S0WCC0036AA	MAINS POWER CABLE (AUSTRALIA/OCEANIA)	AS/NZS 3112		1
1	S0WCU0802AA	MAINS POWER CABLE (USA 110)	NEMA 5-20 (1.9Mt)		1
1	S0WCU0410AA	MAINS POWER CABLE (USA 110)	NEMA 5-20 (3.5Mt)		1
1	S0WCC0040AA	MAINS POWER CABLE (SOUTH AFRICA/INDIA)	SANS 164-2		1
1	S0WCC0032AA	MAINS POWER CABLE (ARGENTINA/URUGUAY)	IRAM 2073		1
1	S0WCC0017AA	MAINS POWER CABLE (UK)	UK BS1363		1
1	S0WCC0012AA	MAINS POWER CABLE (JAPAN)	JIS8303		1
1	S0WCU0409AA	MAINS POWER CABLE (USA 220)	NEMA 6-20		1
1	S0WC00290	MAINS POWER CABLE (EUR)	SCHUKO CEE 7/4		1
1	S0WCC0038AA	MAINS POWER CABLE (BRAZIL)	NBR 14136		1
1	S0WCC0020AA	MAINS POWER CABLE (CHINA)	CPCS-CCC		1
2	SE0000013	CHEST BELT TRANSMITTER	NON CODED		1
2	SE0000009	ELASTIC STRAP	/		1
3	S0SM00420AQ-M1	USER MANUAL	EXCITE		1
4	S0Z689	GRUB SCREW - CONE POINT	M5x10 Z UNI5927		1
4	S0Z1016	BOLT	M5X12 8.8 (4 H.W.)		1
4	S0N001478AB	BRACKET	/		1
5	A0000352	NON-SLIP PLATFORM (FRONT)	for Moquette		1
6	A0000799	NON-SLIP PLATFORM (REAR)	FOR PARQUET		1
7	ST0000994AA	NON-SLIP FOOT	FOR PARQUET		2
7	S0G001938AA-NR	NON-SLIP FOOT	FOR MOQUETTE		2