Integrity Series Treadmills

CLST-XXXXX-01 (CLL), CST-XXXXX-01 (CSL),
97T-XXXXX-01 (TDL), CLST-XXXXX-02PFT,
CLST-XXXXX-03PFT

Parts Manual

9.18.17



LifeFitness
WHAT WE LIVE FOR

Table of Contents

Miscellaneous 2

Console Assembly (CN) 3

PFT Refresh Consoles 5

- Drive Motor Parts 6
- Main Drive System and Miscellaneous Components 7

Base Frame Electronics (BE) 8

- DSP Motor Controller Assembly 8
- Stride Sensor Assembly 9
- PFC, Line Filter and Transformer 10

Lift System (LS) 11

- Lift Motor Assembly 11
- Lift Frame Assembly 12
- Power Receptacle Assembly 14

LifePulse and Activity Zone Assembly (LP) 15

Front Roller Assembly (FR) 16

Upper Frame Parts (UF) 17

Lower Frame (LF) 19

- Leveler Assembly 19
- Drive Belt, Anti-Static Brush, Misc. 20
- Side Mounted Components 21
- Running Belt, Deck and Associated Components 22
- Motor Cover, Front Cover, End Caps 24

Wiring 25

Miscellaneous

Miscellaneous Part Numbers

Description	Part Number
Operation Manual	M051-00K63-A293
Hardware Bag	AK58-00661-0000
Network C-Safe Kit	GK63-00002-0003
Arctic Silver Touch-up Paint:	
Spray Can	0017-00008-0204
.5 oz Bottle w/ Applicator	0017-00008-0205
.33 oz Pen	0017-00008-0206
Performance Purple Touch-up Paint (Planet Fitness):	
0.5 oz Brush	3249413
4.5 oz Aerosol Spray	3249313
Hex Yellow Touch-up Paint (Retro Fitness)	
12 oz Spray	8809701
0.6 oz Bottle	8809801

Serial Number Table

Item	Alpha Code (Prefix)	Starting Serial Number	Ending Serial Number
97T-XXXXX-01	TDL	100000	
CLST-XXXXX-01	CLL	100000	
CLST-XXXXX-01PF Planet	CLL	600000	
CLST-XXXXX-01RF- Retro	CLL	800000	
CST-XXXXX-01	CSL	100000	
CLST-XXXXX-02PF	PFT	100001	
CLST-XXXXX-03PF	PFT	100001	

Console Assembly (CN)

Exploded View

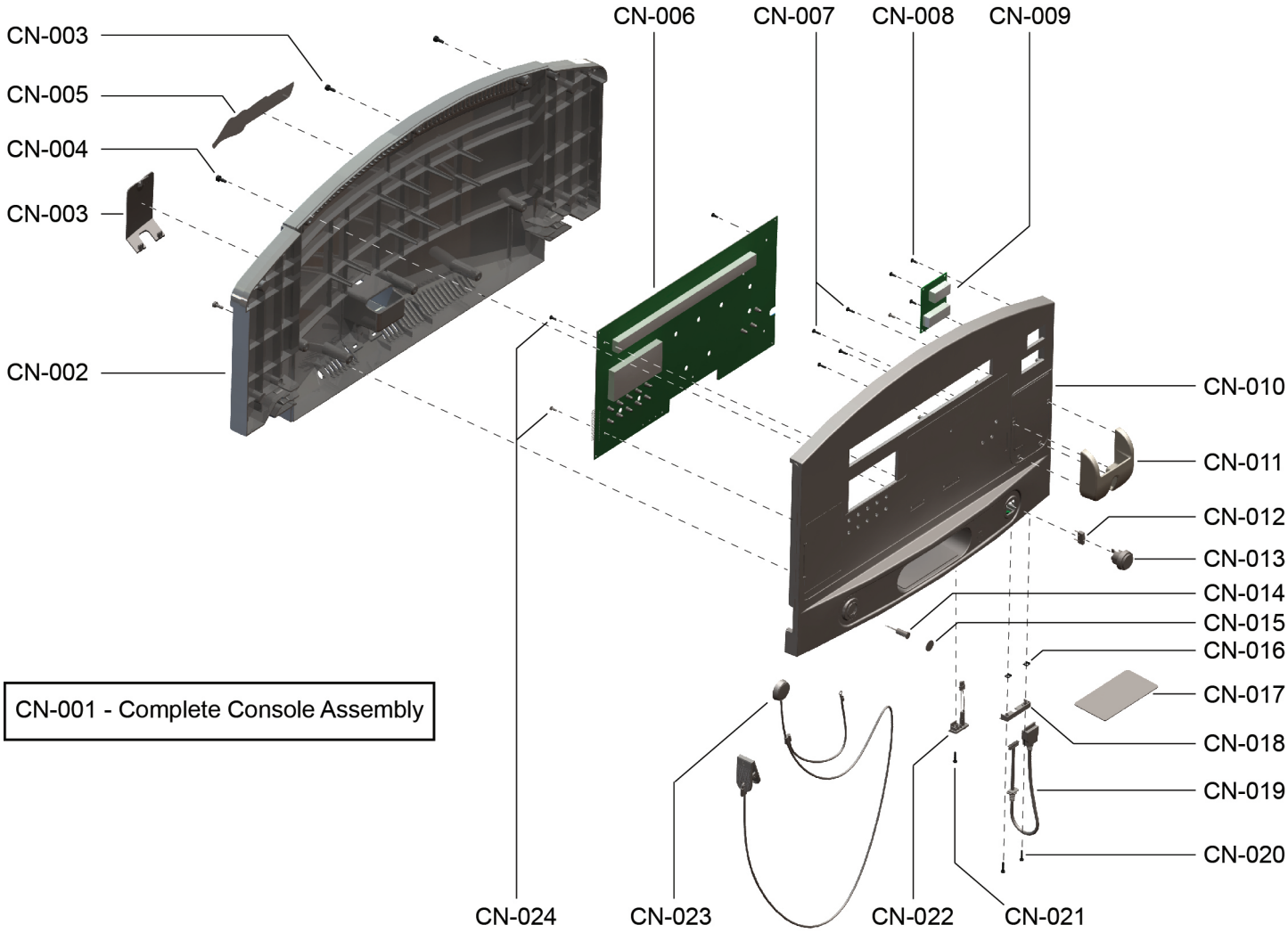

Parts List

Item	Alpha Code	Part Number	Description
CN-001	CLL	CLEDT-ENGEX-02N	English/English Console Assembly
"	CLL8xxxxx	CLEDT-ENGEX-02RFN	English/English Console Assembly - Retro Fitness
"	CLL6xxxxx	CLEDT-ENGEX-02PFN	English/English Console Assembly - Planet Fitness
"	CLL	CLEDT-GERMX-02N	German/Metric Console Assembly
"	CLL	CLEDT-FRNMX-02N	French/Metric Console Assembly
"	CLL	CLEDT-SPNMX-02N	Spanish/Metric Console Assembly
"	CLL	CLEDT-ITLMX-02N	Italian/Metric Console Assembly
"	CLL	CLEDT-DUTMX-02N	Dutch/Metric Console Assembly
"	CLL	CLEDT-RUSMX-02N	Russian/Metric Console Assembly
"	TDL	CLED97T-ENGEX-02N	English/English Console Assembly
"	TDL	CLED97T-GERMX-02N	German/Metric Console Assembly
"	TDL	CLED97T-FRNMX-02N	French/Metric Console Assembly
"	TDL	CLED97T-SPNMX-02N	Spanish/Metric Console Assembly
"	TDL	CLED97T-ITLMX-02N	Italian/Metric Console Assembly
"	TDL	CLED97T-DUTMX-02N	Dutch/Metric Console Assembly

Item	Alpha Code	Part Number	Description
“	PFT	See Page 5	Planet Fitness Refresh Console Options
“	TDL	CLED97T-RUSMX-02N	Russian/Metric Console Assembly
“	CSL	CSLEDT-ENGMX-01N	English/Metric Console Assembly - Club Series
“	CSL	CSLEDT-ENGEX-01N	English/English Console Assembly - Club Series
CN-002	CLL, CSL, TDL, PFT	0K58-01272-0202	Rear Console Case
CN-003	CLL, CSL, TDL, PFT	0K58-01280-0201	Console Accessory Cover
CN-004	CLL, CSL, TDL, PFT	0017-00101-1288	Rear Console Case Mounting Screw (8)
CN-005	CLL, CSL, TDL, PFT	0K58-01357-0001	Rear Console Decal
CN-006	CLL, CSL, TDL	A084-92366-0001	Programmed Console Board
“	PFT	See Page 5	Programmed Console Board - Planet Fitness Options
CN-007	CLL, CSL, TDL, PFT	3223501	iPod Holder Mounting Screw (4)
CN-008	CLL, CSL, TDL, PFT	0017-00101-1275	Side Display PCB Mounting Screw (3)
CN-009	CLL, CSL, TDL, PFT	B084-92255-0001	Side Display PCB
CN-010	CLL	AK86-00041-0000	English/English *Bezel and Overlay* Assy (see Note 1)
“	CLL8xxxxx	AK86-00041-0600	English/English *Bezel and Overlay* Assy - Retro (see Note 1)
“	CLL6xxxxx	AK86-00041-0800	English/English *Bezel and Overlay* Assy - Planet (see Note 1)
“	CLL	AK86-00042-0000	German/Metric *Bezel and Overlay* Assy (see Note 1)
“	CLL	AK86-00043-0000	French/Metric *Bezel and Overlay* Assy (see Note 1)
“	CLL	AK86-00044-0000	Spanish/Metric *Bezel and Overlay* Assy (see Note 1)
“	CLL	AK86-00045-0000	Italian/Metric *Bezel and Overlay* Assy (see Note 1)
“	CLL	AK86-00046-0000	Dutch/Metric *Bezel and Overlay* Assy (see Note 1)
“	CLL	AK86-00047-0000	Russian/Metric *Bezel and Overlay* Assy (see Note 1)
“	TDL	AK86-00034-0000	English/English *Bezel and Overlay* Assy (see Note 1)
“	TDL	AK86-00035-0000	German/Metric *Bezel and Overlay* Assy (see Note 1)
“	TDL	AK86-00036-0000	French/Metric *Bezel and Overlay* Assy (see Note 1)
“	TDL	AK86-00037-0000	Spanish/Metric *Bezel and Overlay* Assy (see Note 1)
“	TDL	AK86-00038-0000	Italian/Metric *Bezel and Overlay* Assy (see Note 1)
“	TDL	AK86-00039-0000	Dutch/Metric *Bezel and Overlay* Assy (see Note 1)
“	TDL	AK86-00040-0000	Russian/Metric *Bezel and Overlay* Assy (see Note 1)
“	CSL	AK86-00048-0000	English/Metric *Bezel and Overlay* Assy (see Note 1)
“	CSL	AK86-00083-0001	English/English *Bezel and Overlay* Assy (see Note 1)
CN-011	CLL, CSL, TDL, PFT	0K86-01003-0200	iPod Holder
CN-012	CLL, CSL, TDL, PFT	0017-00032-0185	Micro Switch
CN-013	CLL, CSL, TDL, PFT	0K58-01321-0000	Stop Switch
CN-014	CLL, CSL, TDL, PFT	AK58-00036-0000	Single Emergency Stop Switch Assembly
CN-015	CLL, CSL, TDL, PFT	0K40-01070-0000	Metal Disk
CN-016	CLL, CSL, TDL, PFT	0017-00103-0343	VMI Nut, 6-32 Self-lock (2)
CN-017	CLL, CSL, TDL, PFT	0K86-01031-0700	CD Tray Rubber Pad
CN-018	CLL, CSL, TDL, PFT	0K86-01004-0200	iPod Cable Bracket
CN-019	CLL, CSL, TDL, PFT	AK86-00088-0200	iPod Cable
CN-020	CLL, CSL, TDL, PFT	0017-00101-1811	Mounting Bracket Screw (2)
CN-021	CLL, CSL, TDL, PFT	0017-00101-1811	Headphone Jack Mounting Screw (1)
CN-022	CLL, CSL, TDL, PFT	AK86-00025-0201	Headphone Jack
CN-023	CLL, CSL, TDL, PFT	AK58-00322-0000	Tether Stop Assembly
CN-024	CLL, CSL, TDL, PFT	0017-00101-1275	Main PCB Mounting Screw (4)
	OPT	0K75-01035-0000	Wire Cover

Note 1) Bezel and Overlay Assembly consists of: Bezel, Overlay, Switch and iPod Holder Assembly

PFT (Planet Fitness Refresh) Consoles

See below pictures to identify console revision and reference proper items in the below table.

-02PF Console



Not Compatible with Bellus

-04PF Console

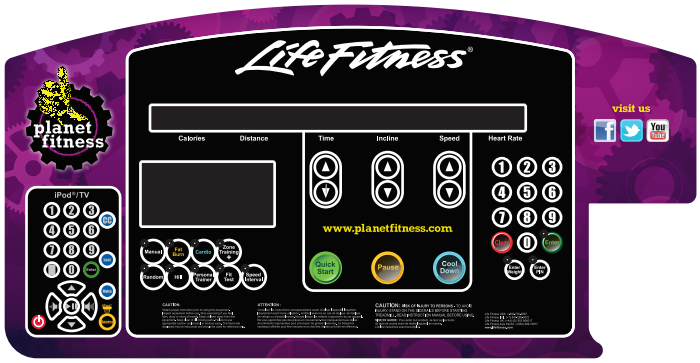

Bellus Compatible

Parts List

Item	Alpha Code	Part Number	Description
CN-001	PFT(-02PF)	CLEDT-ENGEX-02PFN	English/English Console Assy -Planet Fitness-02PF Console
“	PFT (-03PF)	CLEDT-ENGEX-04PFN	English/English Console Assy-Planet Fitness-04PF Console
“	PFT (-04PF)	CLEDT-ENGEX-04PFN	English/English Console Assy-Planet Fitness-04PF Console
CN-006	PFT (-02PF)	A084-92366-0002	Programmed Control Board-02PF/-05PF Console
“	PFT (-03PF)	A084-92366-0000	Programmed Console Board-04PF Console
“	PFT (-04PF)	CLEDT-ENGEX-04PFN	English/English Console Assy-Planet Fitness-04PF Console
“	PFT(-05PF)	A084-92366-0002	Programmed Control Board-02PF/-05PF Console

Drive Motor (DM)

Drive Motor Parts

Exploded View

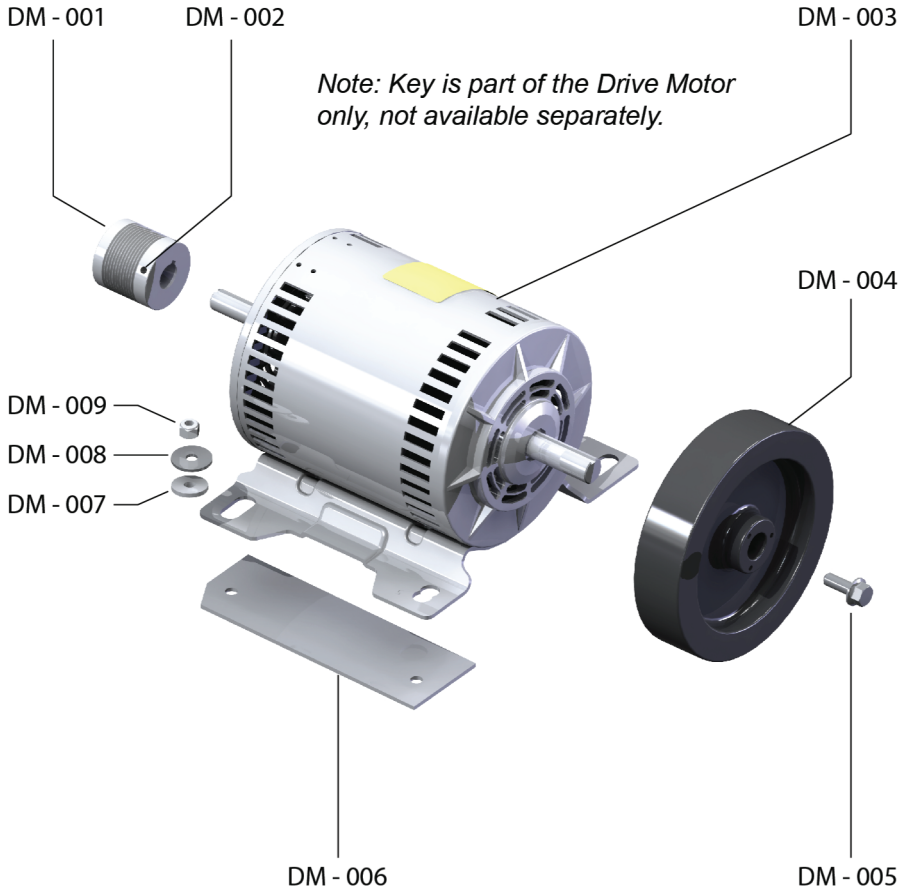

Parts List

Item	Alpha Code	Part Number	Description
DM-001	CLL, CSL, PFT	0K58-01057-0001	Motor Pulley (CLST)
DM-001	TDL	0K58-01056-0001	Motor Pulley (97Ti)
DM-002	CLL, CSL, TDL, PFT	0017-00101-0333	Allen Screw
DM-003	CLL, CSL, TDL, PFT	0K58-01386-0004	“TAPER DRIVE MOTOR” DRIVE-MOTOR w/ Caution Label
DM-004	CLL, CSL, TDL, PFT	0K58-01092-0004	FLYWHEEL: CAST-IRON; w/ TAPER C
DM-005	CLL, CSL, TDL, PFT	0017-00101-1885	3/8 - 16X 48 HEX SOC L CS ST SS B
DM-006	CLL, CSL, TDL, PFT	0K58-01256-0001	Insulating Pad (2)
DM-007	CLL, CSL, TDL, PFT	0K58-01255-0000	Insulating Shoulder Washer (4)
DM-008	CLL, CSL, TDL, PFT	0017-00104-0409	Washer (4)
DM-009	CLL, CSL, TDL, PFT	0017-00103-0027	Locking Nut (4)

Main Drive System and Miscellaneous Components

Exploded View

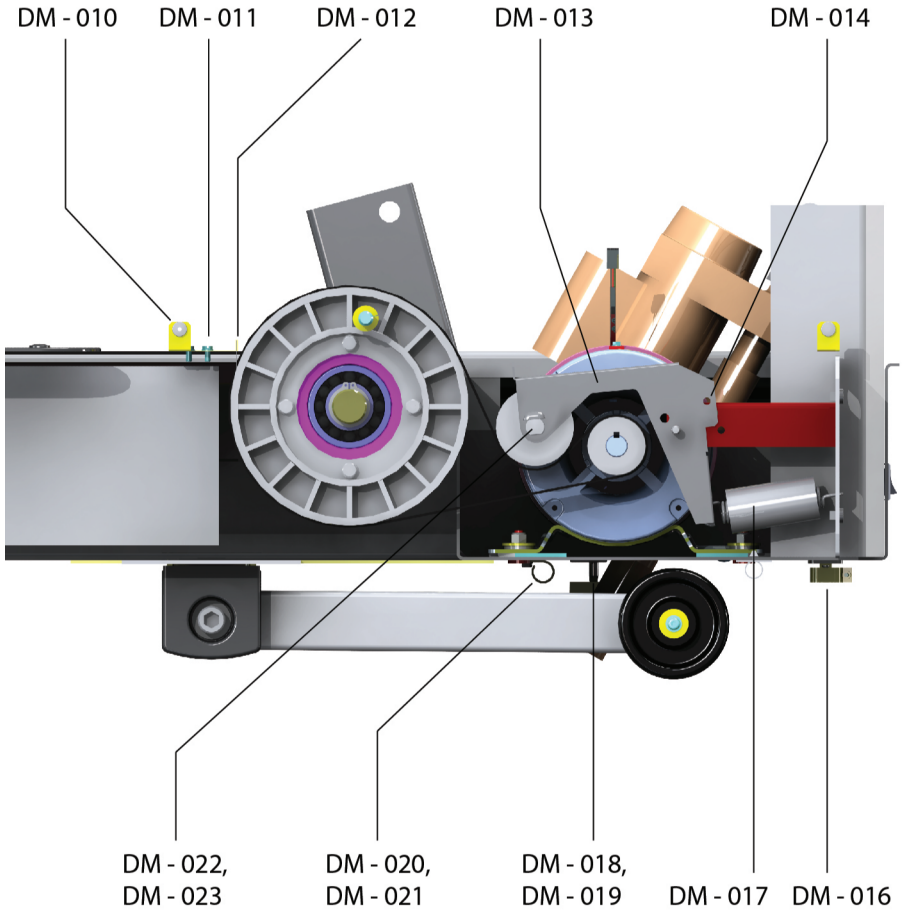

Parts List

Item	Alpha Code	Part Number	Description
DM-010	CLL, CSL, TDL, PFT	0017-00042-0326	Grommet
DM-011	CLL, CSL, TDL, PFT	0017-00101-1193	Tinsel Bracket Screw (2)
DM-012	CLL, CSL, TDL, PFT	0K58-01263-0001	Anti-static Brush
DM-013	CLL, CSL, TDL, PFT	AK58-00053-0002	Idler Arm Assembly
DM-014	CLL, CSL, TDL, PFT	0017-00007-0248	Idler Pin
DM-016	CLL, CSL, TDL, PFT	0K26-02055-0000	Idler Spring Damper
DM-017	CLL, CSL, TDL, PFT	0K58-01085-0000	Idler Spring
DM-018	CLL, CSL, TDL, PFT	0017-00032-0195	Limit Switch
DM-019	CLL, CSL, TDL, PFT	AK58-00027-0000	Limit Switch Cable
DM-020	CLL, CSL, TDL, PFT	0017-00042-1072	Wire Clamp
DM-021	CLL, CSL, TDL, PFT	0017-00101-1193	Screw
DM-022	CLL, CSL, TDL, PFT	0K58-01084-0002	Threaded Idler Shaft
DM-023	CLL, CSL, TDL, PFT	0017-00103-0324	Lock Nut: Idler

Base Frame Electronics (BE)

DSP Motor Controller Assembly

Exploded View

DSP or AC Motor Controller Assembly

BE-001: 100-120V
BE-002: 200-240V
BE-004: 6V Jumper (Not Shown)

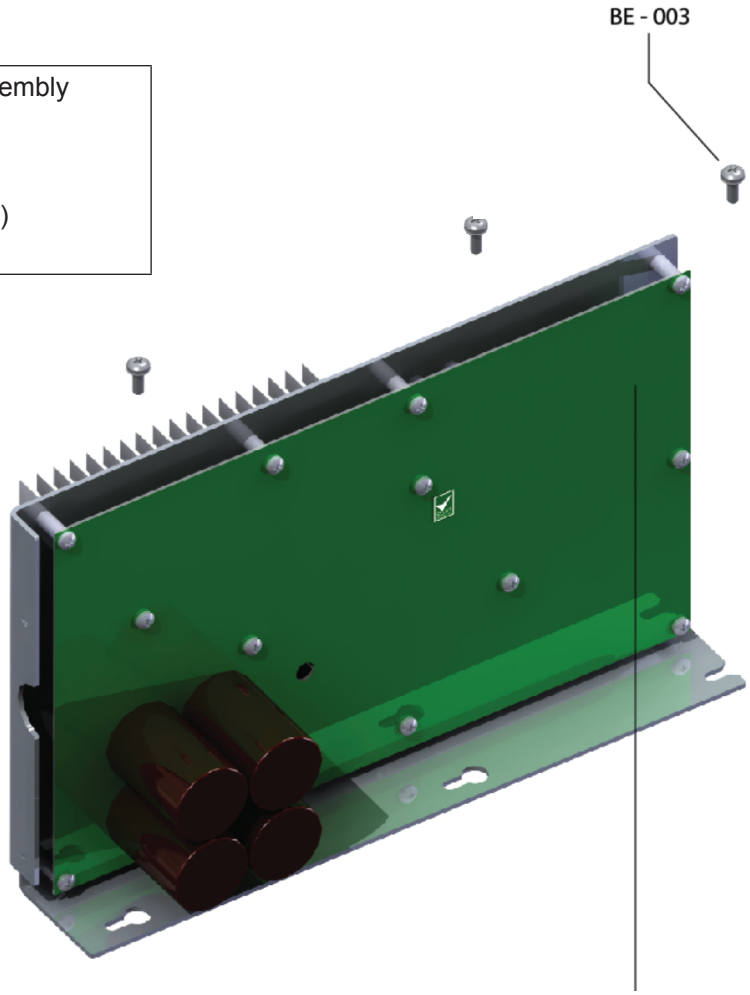

For High Voltage on 97T Only

Note 1: Keep the jumper (BE-004), the DSP Motor Controller is not supplied with it.

Note 2: If no jumper on old controller, then order jumper (BE-004) along with new controller.

Parts List

Item	Alpha Code	Part Number	Description
BE-001	TDL, PFT	AK75-00005-0000	Low voltage commercial AC motor controller
"	CSL	AK75-00005-0002	Low voltage consumer AC motor controller
BE-002	CLL, TDL	AK65-00071-0009	High voltage commercial DSP motor controller (Need BE-004 also)
"	CSL	AK75-00005-0003	High voltage consumer AC motor controller
"	CLL	AK75-00005-0001	High voltage commercial AC motor controller
BE-003	CLL, CSL, TDL, PFT	0017-00101-1781	Phillips Pan Screws (3)
BE-004	TDL	AK86-00027-0000	6V Power Jumper (High Voltage for 97T Only)

Note 3: When upgrading the motor controller, on a high voltage CLL treadmill from an AK65-00071-0009 to an AK75-00005-0001 the lift motor must be changed. Also the transformer and circuit breaker are no longer needed and can be removed.

Stride Sensor Assembly

Exploded View

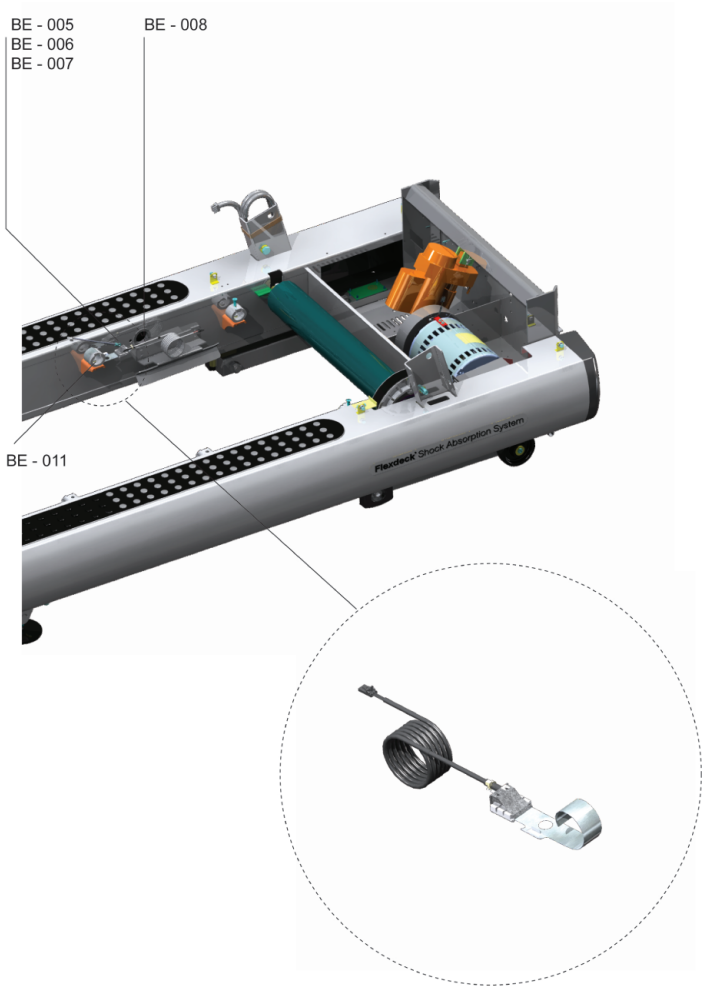

Parts List

Item	Alpha Code	Part Number	Description
BE-005	TDL	AK58-00083-0001	Cable Assembly Jumper; GR/YL; 7 IN. B
BE-006	CLL, CSL, TDL, PFT	0017-00101-0883	Wire Clamp Screws (2)
BE-007	TDL	0017-00104-0460	WSH 8 172-.562-025 DS-D ST ZN B
BE-008	CLL, CSL, TDL, PFT	0017-00042-1180	BUSHING: SNAP; 1.75” B
BE-011	TDL	AK58-00560-0000	STRIDE-ASENSOR ASSY: PURCHASED C

PFC, Line Filter and Transformer

Exploded View

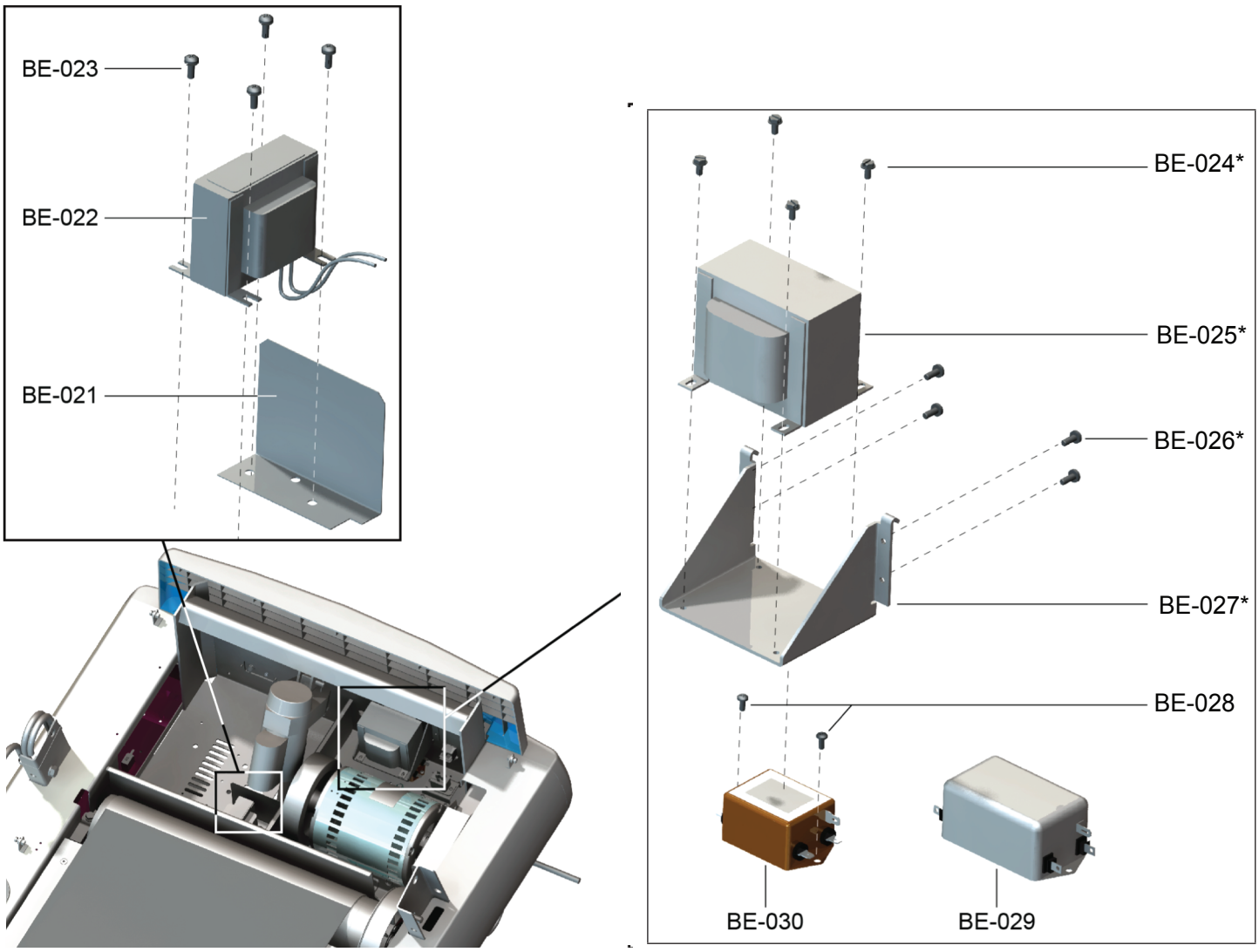

*Used in High Voltage Commercial Only.

Parts List

Item	Alpha Code	Part Number	Description
BE-021	CLL, CSL, TDL, PFT	0K60-01215-0000	GUARD: INDUCTOR B
BE-022	CSL	111E-00001-0041	INDUCTOR: 3MH; 120V C
“	CLL, CSL, TDL, PFT	111E-00001-0042	INDUCTOR: 15 MH; 230V 2-SHTS-C
BE-023	CLL, CSL, TDL, PFT	0017-00101-1781	VMI 10-32X 8 PHL PAN S TT ST ZN B (4)
BE-024*	CLL, TDL	0017-00101-1193	VMI 10-32X 6 SLT HXWL TT G5 ZD B (4)
BE-025*	CLL, TDL	0017-00003-0905	XFRMR: AUTO; EURO D
BE-026*	CLL, TDL	0017-0101-1781	VMI 10-31X 8 PHL PAN S TT ST ZN B (4)
BE-027*	CLL, TDL	0K58-01314-0000	BRLT: XFRMR D
BE-028	CLL, CSL, TDL, PFT	0017-00101-0162	VMI 8-32X 6 PHL PAN TT ST PH B (2)
BE-029	CLL, CSL, TDL, PFT	0017-00003-0898	FILTER: LINE; 10-AMP 4-SHT C (230VAC)
BE-030	CLL, CSL, TDL, PFT	0017-00003-1015	FILTER: LINE; 20A 3-SHTS C (120VAC)

Lift System (LS)

Lift Motor Assembly

Exploded View

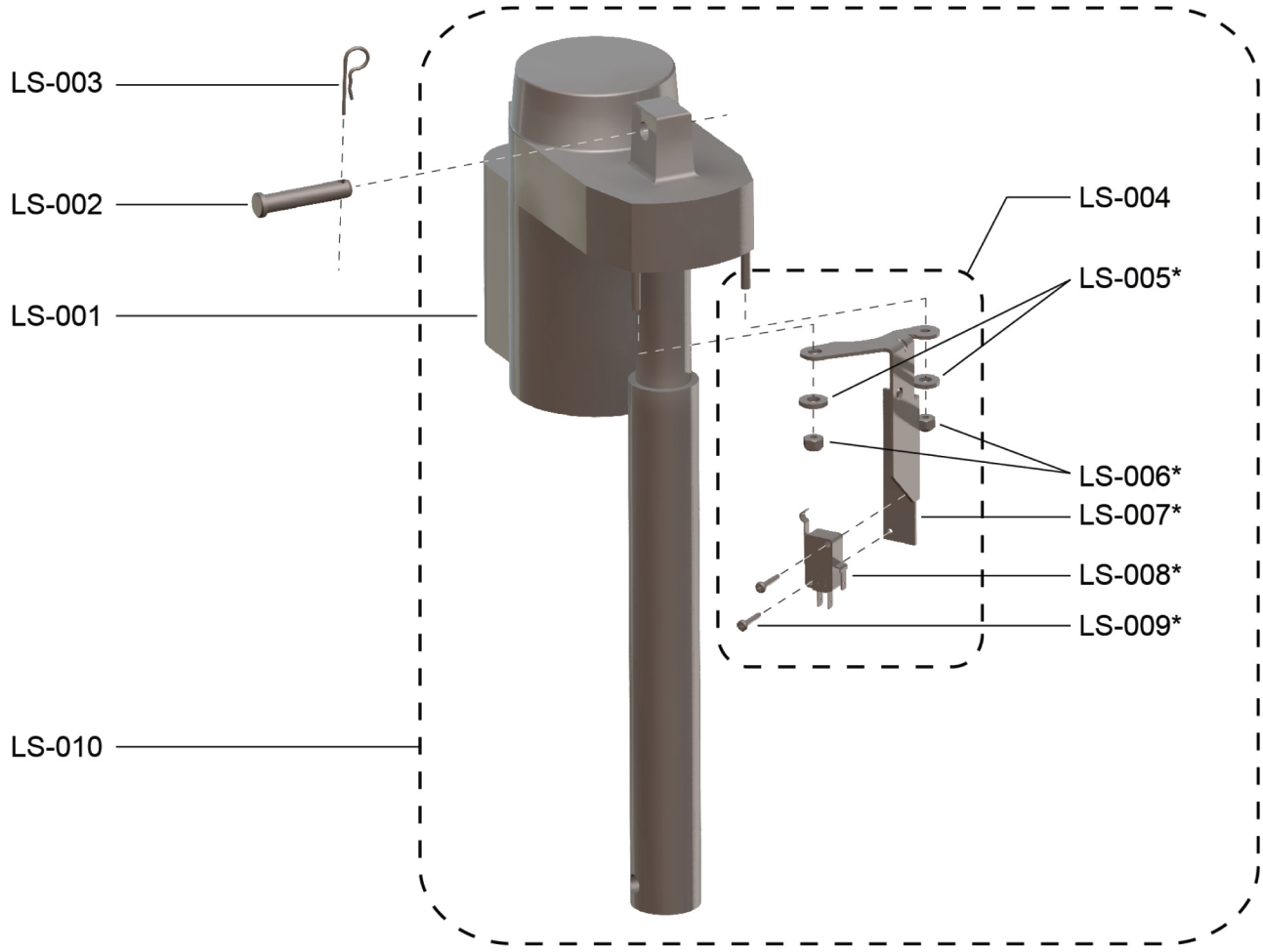

Parts List

Item	Alpha Code	Part Number	Description
LS-001	CLL, PFT, CDL	0K58-01062-0000	Lift Motor: Linear Actuator, 120V/60Hz
“	CSL, CLL	0K58-01550-0000	Lift Motor: Linear Actuator, 230V/60Hz
LS-002	CLL, CSL, PFT	0017-00007-0214	Clevis Pin
LS-003	CLL, CSL, PFT	0017-00007-0208	Clevis Clip
LS-004	TDL	AK58-00116-0000	Decline Switch Bracket Assembly - includes items in asterisk (*)
LS-005*	TDL	0017-00104-0330	Washer (2)
LS-006*	TDL	0017-00103-0283	Nut (2)
LS-007*	TDL	0K58-01150-0004	Bracket: Switch mounting C (decline switch bracket)
LS-008*	TDL	0017-00032-0194	SWITCH: MINI; SPDT B (mini switch)
LS-009*	TDL	0017-00101-1629	4-40X 10 PHL PAN F ST ZN B (2)
LS-010	TDL	AK58-00075-0000	Lift Motor Bracket Assembly

Lift Frame Assembly

Exploded View

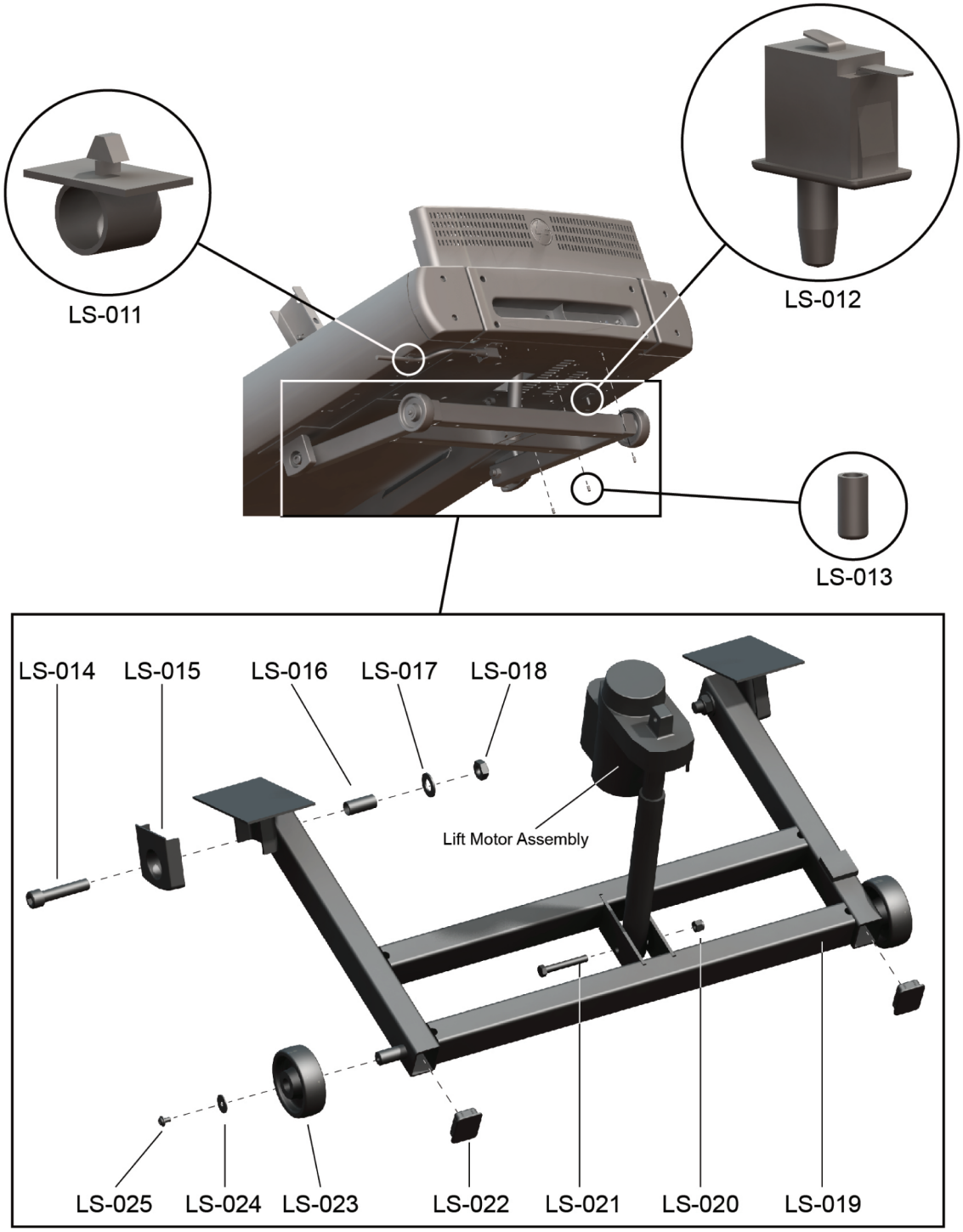

Parts List

Item	Alpha Code	Part Number	Description
LS-011	CLL, CSL, TDL, PFT	0017-00042-0840	Push Mount Clip (1)
LS-012	CLL, CSL, TDL, PFT	0017-00032-0195	Limit Switch
LS-013	CLL, CSL, TDL, PFT	0017-00042-1075	Vinyl Cap
LS-014	CLL, CSL, TDL, PFT	0017-00101-1777	Hex Screw (2)
LS-015	CLL, CSL, TDL, PFT	0K58-01322-0000	Lift Frame Pivot Cover (2)
LS-016	CLL, CSL, TDL, PFT	0K58-01089-0000	Bronze Sleeve (2)

Item	Alpha Code	Part Number	Description
LS-017	CLL, CSL, TDL, PFT	0017-00104-0259	Flat Washer (2)
LS-018	CLL, CSL, TDL, PFT	0017-00103-0285	Lock Nut (2)
LS-019	CLL, CSL, TDL, PFT	AK58-00677-0000	Lift Frame
LS-020	CLL, CSL, TDL, PFT	0017-00103-0025	Lock Nut
LS-021	CLL, CSL, TDL, PFT	0017-00101-1021	Lift Motor Hex Bolt
LS-022	CLL, CSL, TDL, PFT	0017-00042-1076	Lift Frame End Cap (4)
LS-023	CLL, CSL, TDL, PFT	0K56-01071-0000	Wheel (2)
LS-024	CLL, CSL, TDL, PFT	0017-00104-0189	Washer (2)
LS-025	CLL, CSL, TDL, PFT	0017-00101-1612	Phillips Screw (2)

Power Receptacle Assembly

Exploded View

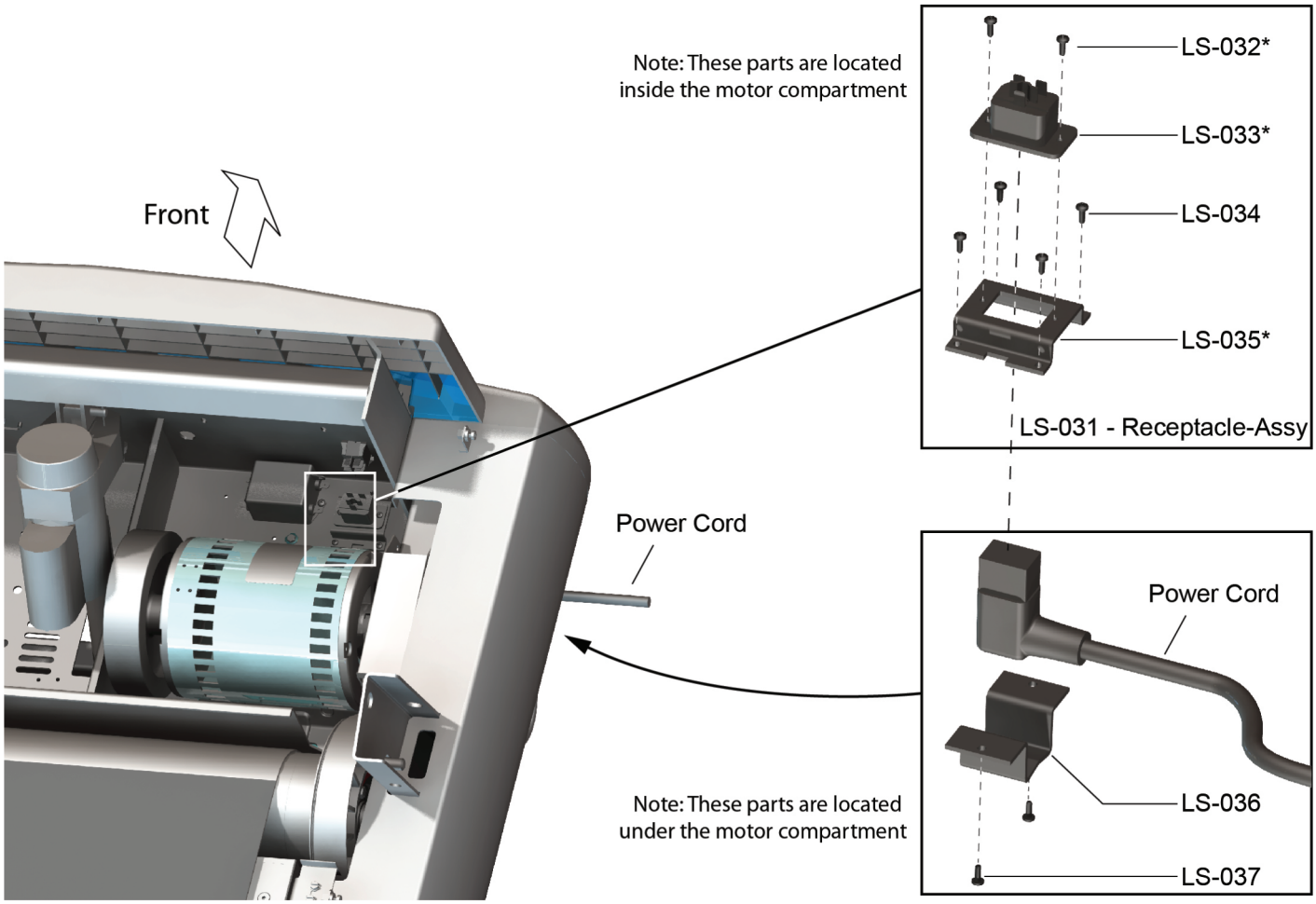

Parts List

Item	Alpha Code	Part Number	Description
LS-031	CLL, CSL, TDL, PFT	AK58-00514-0000	RECEPTACLE-ASSY: MFG; RECESS B - includes items in asterisk (*)
LS-032*	CLL, CSL, TDL, PFT	0017-00101-1723	VMI 6-32X 6 PHL PAN TT ST BZ B (2)
LS-033*	CLL, CSL, TDL, PFT	0017-00003-0949	RECEPTACLE: IEV; SIDE-FLANGE B
LS-034	CLL, CSL, TDL, PFT	0017-00101-1723	VMI 6-32X PHL PAN TT ST BZ B (4)`
LS-035*	CLL, CSL, TDL, PFT	0K58-01419-0000	BRKT: LINE-CORD SOCKET B
LS-036	CLL, CSL, TDL, PFT	0K58-01420-0000	BRKT: RECEPTACLE; LOWER B
LS-037	CLL, CSL, TDL, PFT	0017-00101-1723	VMI 6-32X 6 PHL PAN TT ST BZ B (2)

LifePulse and Activity Zone Assembly (LP)

Exploded View

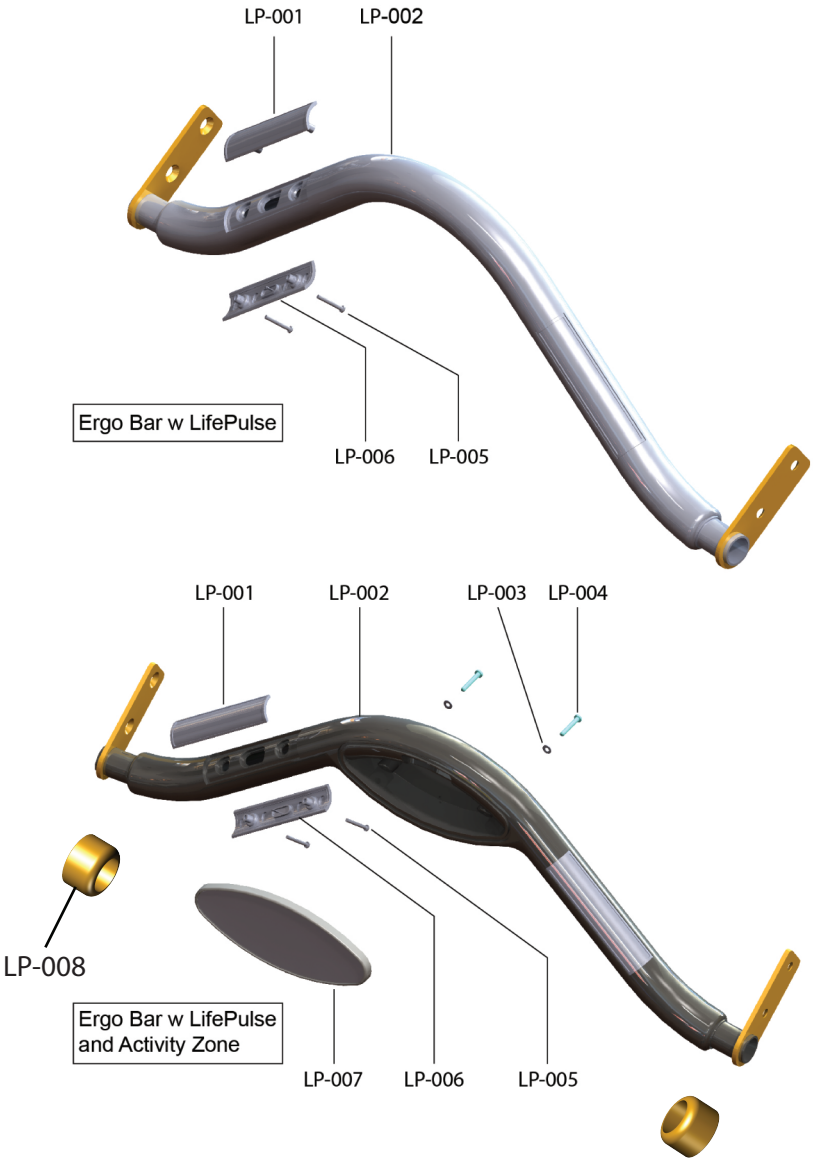

Parts List

Item	Alpha Code	Part Number	Description
LP-001	CLL8XXXXX	AK60-00079-0001	HR Electrode, Top - Retro Fitness (2)
“		AK60-00079-0002	HR Electrode, Top - Stealth Gray (2)
“	CLL, CSL, TDL, PFT	AK60-00079-0203	HR Electrode, Top, Shadow Gray (2)
LF-002	CLL, PFT	AK58-00647-0200	Ergo Bar w/ LifePulse
“	CSL, TDL	AK58-00664-0000	Ergo Bar w/ LifePulse and Activity Zone
LP-003	CLL, CSL, TDL, PFT	0017-00104-0411	Washer (2)
LP-004	CSL, TDL	0017-00101-0824	Activity Zone Mounting Screw (2)
LP-005	CLL, CSL, TDL, PFT	0017-00101-2054	Electrode Mounting Screw (4)
LP-006	CLL8XXXXX	AK60-00080-0001	HR Electrode, Bottom - Retro Fitness (2)
“		AK60-00080-0002	HR Electrode, Bottom - Stealth Gray (2)
“	CLL, CSL, TDL, PFT	AK60-00080-0203	HR Electrode, Bottom - Shadow Gray (2)
LP-007	CSL, TDL	0K86-01029-0000	Activity Zone Overlay
LP-008	CSL, TDL, CLL, PFT	0K58-01347-0000	Gasket: Ergo Bar (2)

Front Roller Assembly (FR)

Exploded View

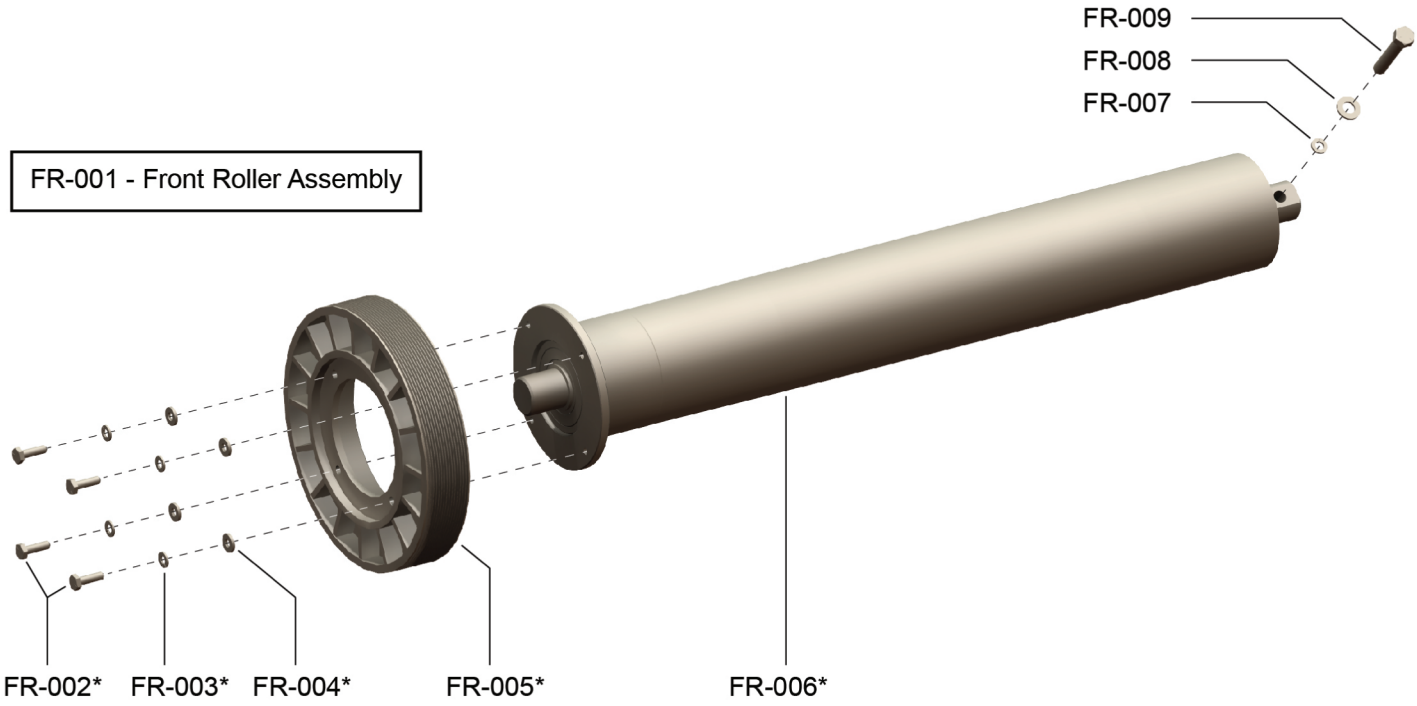

Parts List

Item	Alpha Code	Part Number	Description
FR-001	CLL, CSL, PFT	AK58-00066-0000	FRNT-RLR+PULY ASSY: MFG; 3.5 B - includes items in asterisk (*)
“	TDL	AK58-00067-0000	FRNT-RLR+PULY ASSY: MFG; 5.0 B - includes items in asterisk (*)
FR-002*	CLL, CSL, TDL, PFT	0017-00101-1632	1/4 -20X 14 HXS HEX L BLT G5 ZN B (Hex Bolt)
FR-003*	CLL, CSL, TDL, PFT	0017-00104-0005	WSH 262-.489-062 LK-D ST ZN B (Washer)
FR-004*	CLL, CSL, TDL, PFT	0017-00104-0330	WSH 255-.562-092 FL-D ST ZN B (Washer)
FR-005*	CLL, CSL, TDL, PFT	0K58-01105-0000	PULLEY: POLY-V; 8.000” D
FR-006*	CLL, CSL, PFT	0K58-01001-0001	ROLLER: FRONT; 3.5 IN. D
“	TDL	0K58-01067-0001	ROLLER: FRONT; 5” D
FR-007	CLL, CSL, TDL, PFT	0017-00104-0063	Lock Washer
FR-008	CLL, CSL, TDL, PFT	0017-00104-0043	Flat Washer
FR-009	CLL, CSL, TDL, PFT	0017-00101-0974	Mounting Bolt

Upper Frame Parts (UF)

Exploded View

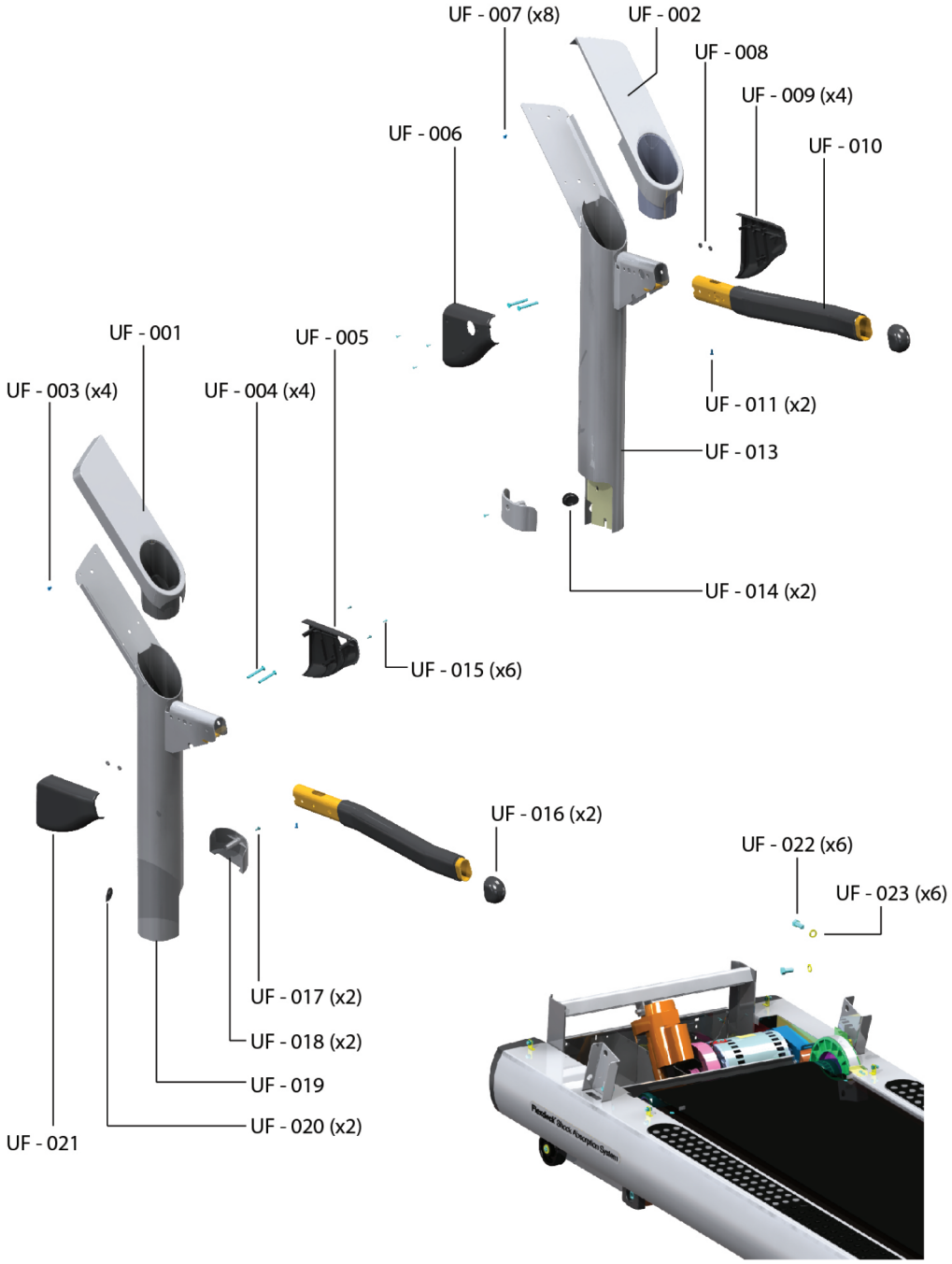

Parts List

Item	Alpha Code	Part Number	Description
UF-001	CLL, CST, TDL, PFT	AK58-00247-0010	Cup Cover Assy - User LT
“	CLL8XXXXX	AK58-00247-0008	Cup Cover Assy - User LT - Retro Fitness
UF-002	CLL, CST, TDL, PFT	AK58-00247-0009	Cup Cover Assy - User RT
“	CLL8XXXXX	AK58-00247-0007	Cup Cover Assy - User RT - Retro Fitness
UF-003	CLL, CST, TDL, PFT	0017-00101-1773	Console Mounting Screw (4)
UF-004	CLL, CST, TDL, PFT	0017-00101-1774	Handrail Mounting Screw (4)
UF-005	CLL, CST, TDL, PFT	0K58-01304-0204	Bottom LT Handrail Boot
UF-006	CLL, CST, TDL, PFT	0K58-01304-0203	Bottom RT Handrail Boot

Item	Alpha Code	Part Number	Description
UF-007	CLL, CST, TDL, PFT	0017-00101-1780	Console/Cup Holder Mounting Screw
UF-008	CLL, CST, TDL, PFT	0017-00103-0327	Handrail Hex Nut (4)
UF-009	CLL, CST, TDL, PFT	0K58-01303-0203	Top RT Handrail Boot
UF-010	CLL, CST, TDL, PFT	AK58-00256-0202	Handrail (2)
UF-011	CLL, CST, TDL, PFT	0017-00101-1773	Handrail Screw (2)
UF-013	CLL, CST, TDL, PFT	AK58-00311-5111	Upright, RT
“	CLL8XXXXX	AK58-00311-0609	Upright, RT - Retro Fitness
“	CLL6XXXXX, PFT	AK58-00311-0811	Upright, RT - Planet Fitness
UF-014	CLL, CST, TDL, PFT	0017-00042-0326	Grommet (2)
UF-015	CLL, CST, TDL, PFT	0017-00101-1770	Handrail Boot Screws (2)
UF-016	CLL, CST, TDL, PFT	0K58-01396-0201	Handrail Tube Cap (2)
UF-017	CLL, CST, TDL, PFT	0017-00101-1772	Upright Tube Cape Screw (2)
UF-018	CLL, CST, TDL, PFT	0K58-01302-0002	Upright Tube Cap (2)
“	CLL8XXXXX	0K58-01302-0603	Upright Tube Cap - Retro Fitness (2)
“	CLL6XXXXX, PFT	0K58-01302-0203	Upright Tube Cap - Planet Fitness (2)
UF-019	CLL, CST, TDL, PFT	AK58-00311-5112	Upright, LT
“	CLL8XXXXX	AK58-00311-0610	Upright, LT - Retro Fitness
“	CLL6XXXXX, PFT	AK58-00311-0812	Upright, LT - Planet Fitness
UF-020	CLL, CST, TDL, PFT	0K58-01305-0002	Upright Plug (2)
“	CLL8XXXXX	0K58-01305-0603	Upright Plug - Retro Fitness (2)
“	CLL6XXXXX, PFT	0K58-01305-0203	Upright Plug - Planet Fitness (2)
UF-021	CLL, CST, TDL, PFT	0K58-01303-0204	Top LT Handrail Boot
UF-022	CLL, CST, TDL, PFT	0017-00101-1778	Upright Mounting Screw (6)
UF-023	CLL, CST, TDL, PFT	0017-00104-0325	Upright Mounting Washer (8)

Lower Frame (LF)

Leveler Assembly

Exploded View

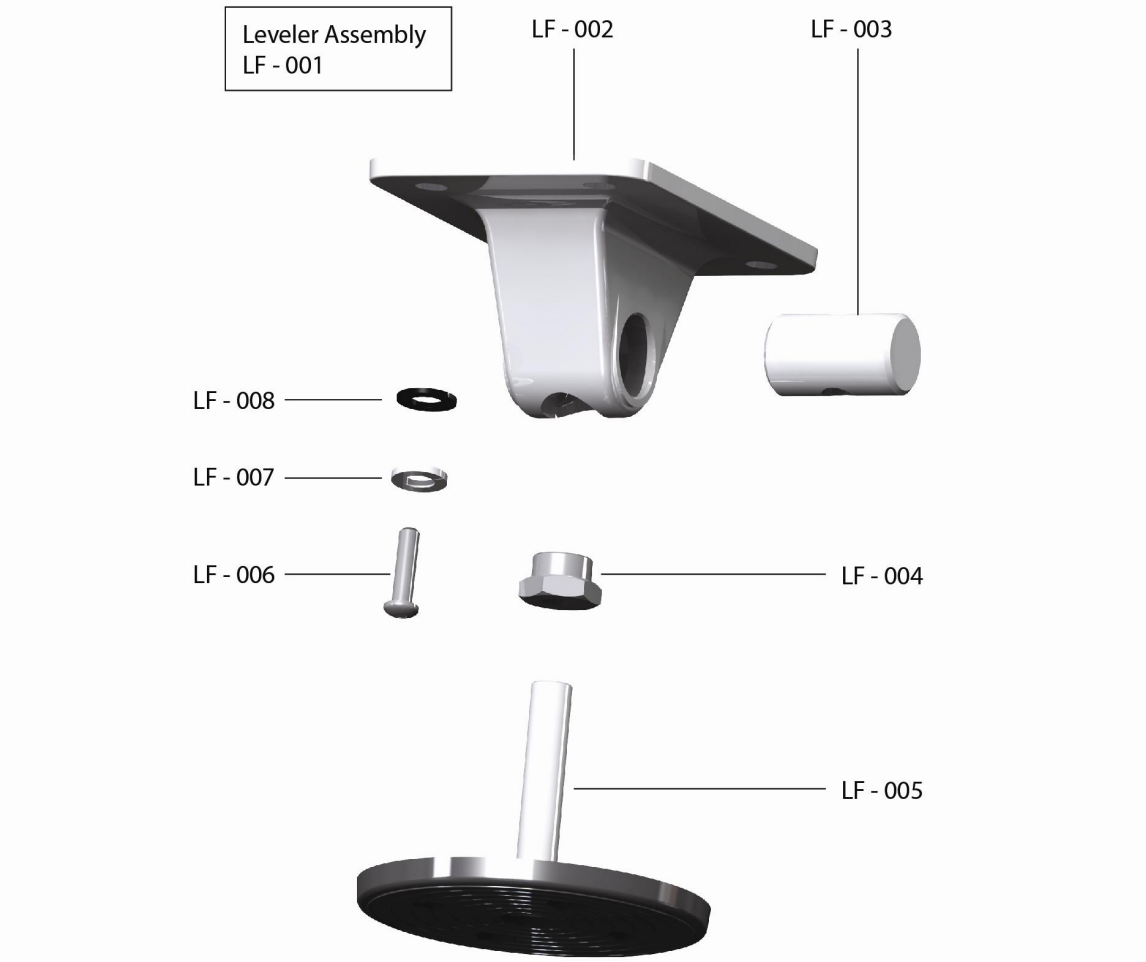

Parts List

Item	Alpha Code	Part Number	Description
LF-001	CLL, CSL, PFT	AK58-00370-0000	Leveler Assembly
“	TDL	AK58-00464-0000	Leveler Assembly
LF-002	CLL, CSL, PFT	0K58-01083-0000	Bracket Leveler
“	TDL	AK58-00089-0000	Bracket Leveler
LF-003	CLL, CSL, PFT	0K58-01098-0000	Pivot Pin
“	TDL	0K58-01098-0001	Pivot Pin
LF-004	CLL, CSL, PFT	0K58-01099-0000	Stop Nut
“	TDL	0K58-01099-0000	Stop Nut
LF-005	CLL, CSL, PFT	0K58-01110-0000	Leveling Foot
“	TDL	0K58-01110-0000	Leveling Foot
LF-006	CLL, CSL, PFT	0017-00101-1652	Hex Bolt (4)
LF-007	CLL, CSL, PFT	0017-00104-0333	Lock Washer (4)
LF-008	CLL, CSL, PFT	0017-00104-0190	Flat Washer (4)

Drive Belt, Anti-Static Brush, Misc.

Exploded View

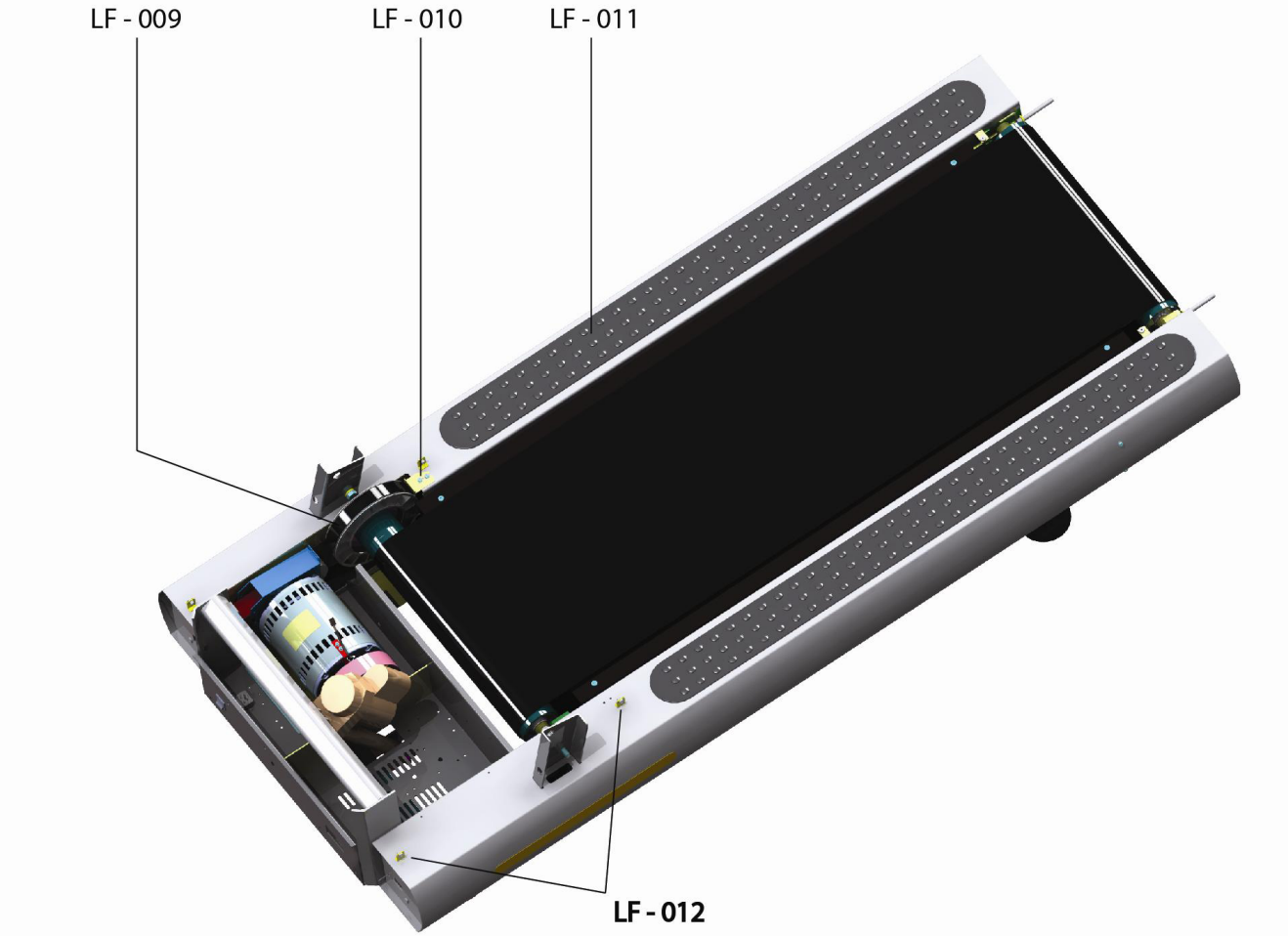

Parts List

Item	Alpha Code	Part Number	Description
LF-009	CLL, CSL, PFT	0K58-01114-0000	Drive Belt
LF-009	TDL	0K58-01115-0000	Drive Belt
LF-010	CLL, CSL, TDL, PFT	0K58-01263-0001	Anti-static Brush
LF-010	CLL, CSL, TDL, PFT	0017-00101-0201	Tinsel Bracket Screw (2)
LF-011	CLL, CSL, TDL, PFT	0K58-01376-0201	Anti-scruff Pad (2)
LF-012	CLL, CSL, TDL, PFT	0017-00042-0326	Grommet

Side Mounted Components

Exploded View

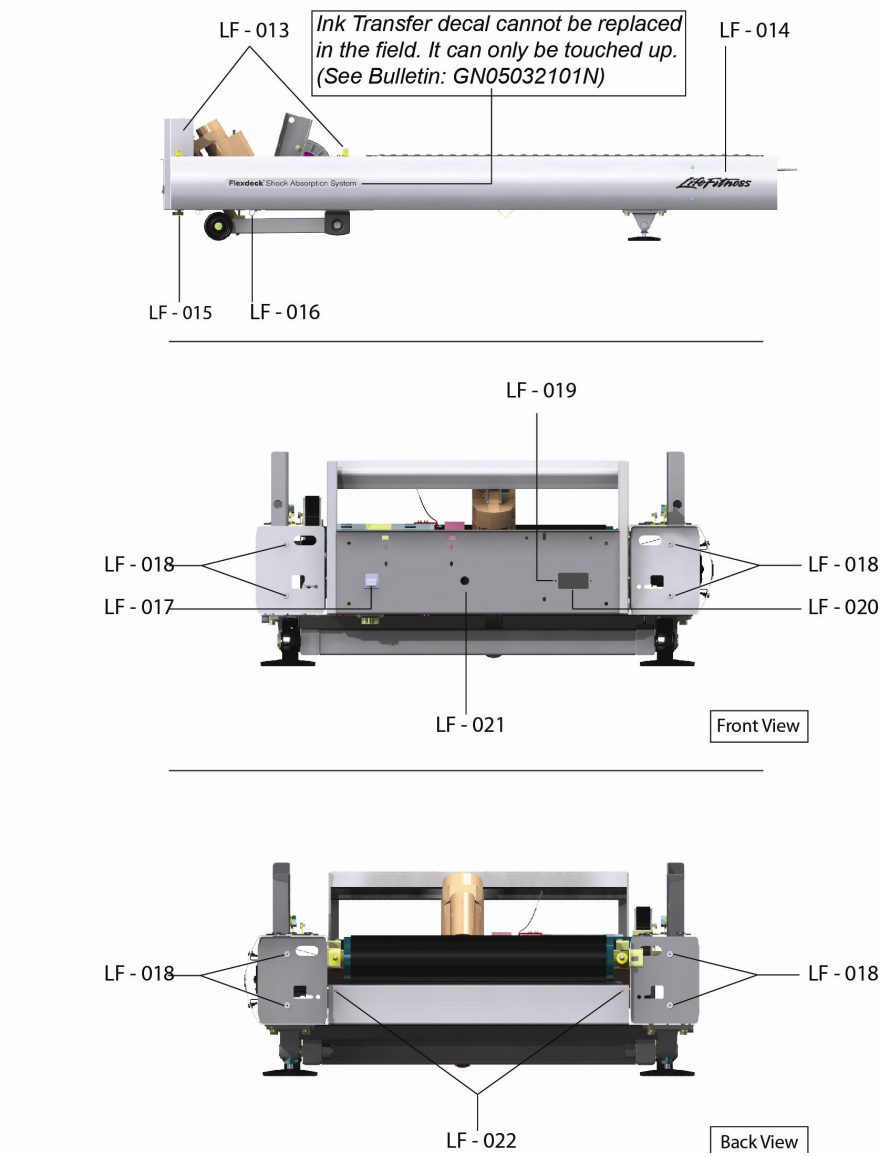

Parts List

Item	Alpha Code	Part Number	Description
LF-013	CLL, CSL, TDL, PFT	0017-00042-0326	Grommet
LF-014	CLL, CSL, TDL, PFT	0K60-01193-0000	Frame Decal LF Logo
LF-015	CLL, CSL, TDL, PFT	0017-00042-0840	Push Mount Clip
LF-016	CLL, CSL, TDL, PFT	0017-00042-1072	Wire Clamp
LF-017	CLL, CSL, TDL, PFT	0017-00032-0198	SWITCH: ROCKER; 22A DPST C
LF-018	CLL, CSL, TDL, PFT	0017-00042-0326	Grommet
LF-019	CLL, CSL, TDL, PFT	0017-00101-0162	VMI 8-32X 6 PHL PAN TT ST PH B
LF-020	CLL, CSL, TDL, PFT	AK58-00329-0001	Access-Plate Assembly (for CLST, 97T)
“	CSL	0K60-01221-0000	Access-Plate Assembly (for CST)
LF-021	CLL, CSL, TDL, PFT	0017-00042-1053	Plug
LF-022	CLL, CSL, TDL, PFT	0017-00042-1147	Grommet (2)

Running Belt, Deck and Associated Components

Exploded View

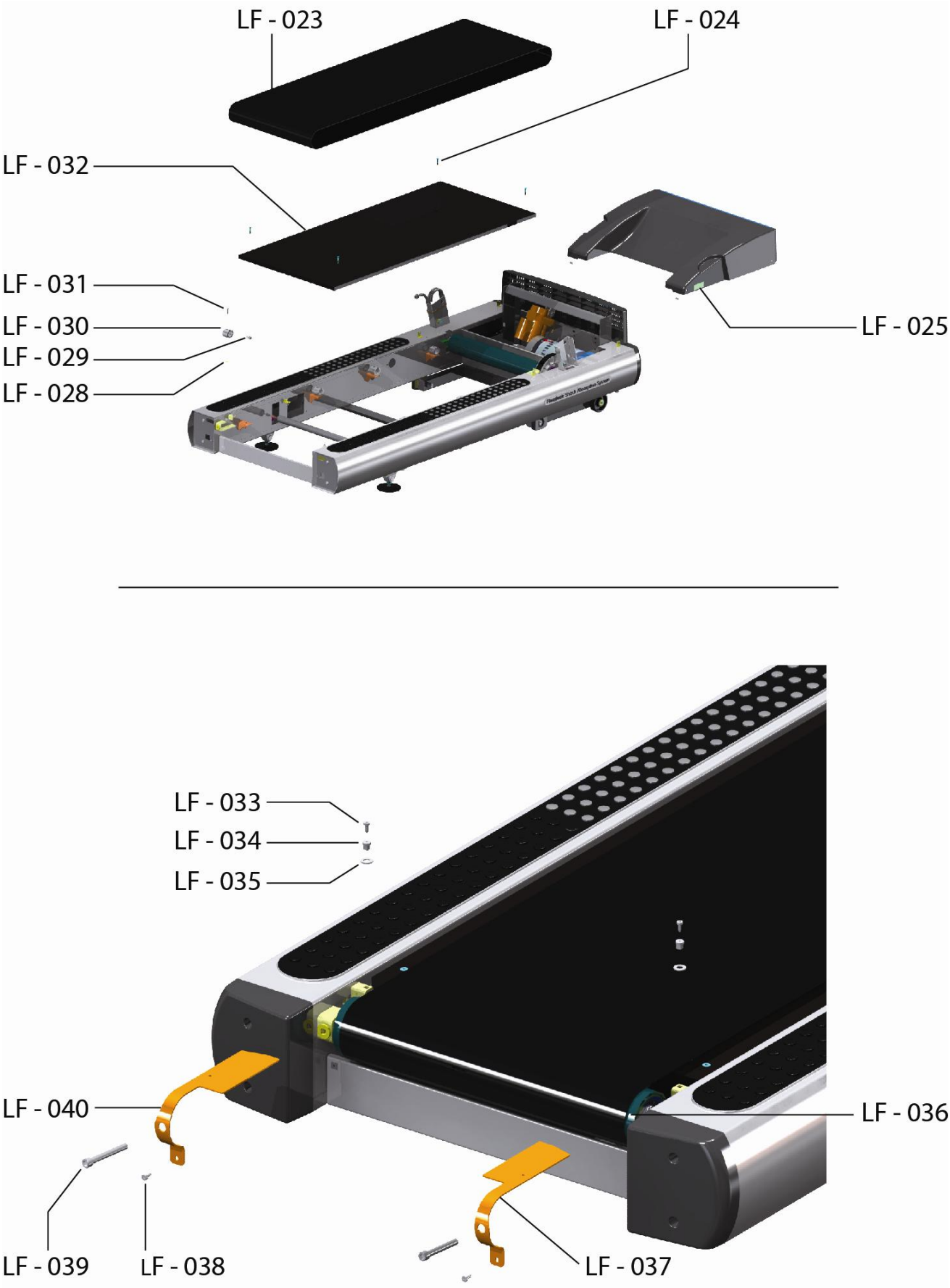

Parts List

Item	Alpha Code	Part Number	Description
LF-023	TDL	0K58-01397-0000	Striding Belt
“	CLL, PFT	0K58-01400-0000	Striding Belt
“	CSL	0K60-01206-0000	Striding Belt
LF-024	CLL, CSL, TDL, PFT	0017-00101-1775	Deck Mounting Screws (4)
LF-025	CLL, TDL	M051-00K58-A014	Caution Label
“	CSL	M051-00560-A063	Caution Label
LF-026	CLL, CSL, TDL, PFT	M051-00K58-A100	Belt Limit Label, RT
LF-028	CLL, CSL, TDL, PFT	0017-00104-0072	Washer (8)
“	CLL, CSL, TDL, PFT	0017-00104-0101	Washer (8)
LF-029	CLL, CSL, TDL, PFT	0017-00103-0198	TECSPAK Tinneman Clip (8)
LF-030	CLL, CSL, TDL, PFT	0K40-01026-0002	TECSPAK Spring (8)
LF-031	CLL, CSL, TDL, PFT	0017-00101-1652	TECSPAK Mounting Screw (8)
LF-032	CLL, TDL, PFT	0K65-01263-0000	Deck
“	CSL	0K60-01204-0000	Deck
LF-033	CLL, CSL, TDL, PFT	0017-00101-1776	Screw
LF-034	CLL, CSL, TDL, PFT	0017-00042-0326	Round Grommet
LF-035	CLL, CSL, TDL, PFT	0017-00104-0043	Washer
LF-036	CLL, CSL, PFT	0K58-01002-0000	Rear Roller, 3.5 in.
“	TDL	0K58-01066-0000	Rear Roller, 5.0 in. (97Ti)
LF-037	TDL	AK58-00361-0001	Rear Roller Guard, RT (97Ti)
“	CLL, CSL, PFT	AK58-00360-0001	Rear Roller Guard, RT (CLST, CST)
LF-038	CLL, CSL, TDL, PFT	0017-00101-1776	Roller Guard Screw (4)
LF-039	CLL, CSL, TDL, PFT	0017-00101-1880	Rear Rollers (2) Adjusting Screws (97Ti, CLST, CST)
LF-040	TDL	AK58-00361-0002	Rear Roller Guard, LT (97Ti)
“	CLL, CSL, PFT	AK58-00360-0002	Rear Roller Guard, LT (CLST, CST)

Motor Cover, Front Cover, End Caps

Exploded View

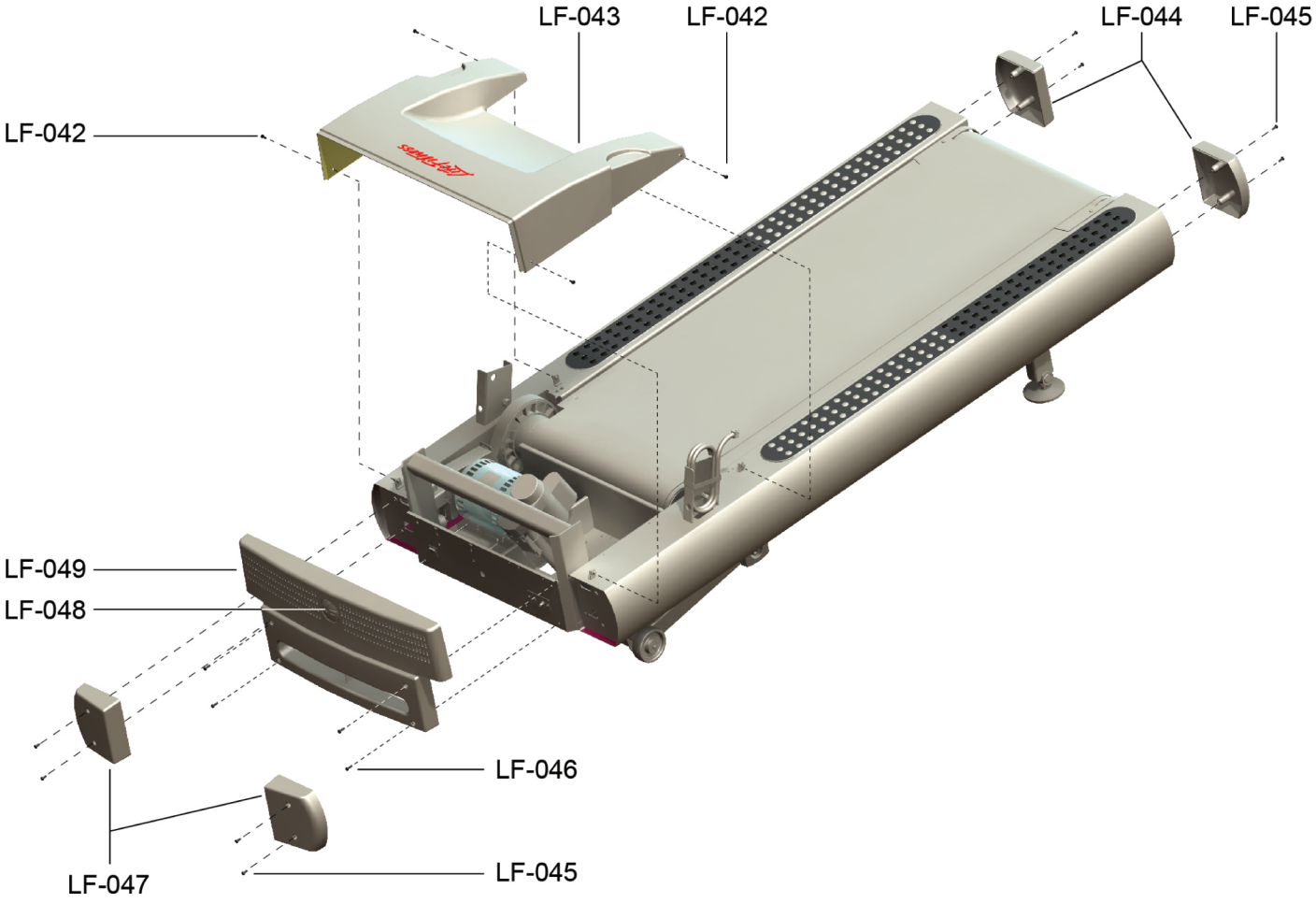

Parts List

Item	Alpha Code	Part Number	Description
LF-042	CLL, CST, TDL, PFT	0017-00101-1772	Motor Cover Screws (4)
LF-043	CLL, TDL	AK58-00397-0201	Motor Cover
“	CST	AK60-00226-0201	Motor Cover
“	CLL8XXXXX	AK58-00397-0501	Motor Cover - Retro Fitness
“	CLL6XXXXX	AK58-00397-0202	Motor Cover - Planet Fitness
“	PFT	AK58-00397-0203	Motor Cover - Planet Fitness
LF-044	CLL, CST, TDL, PFT	0K58-01268-0202	Rear End Cap (2)
“	CLL8XXXXX	0K58-01268-0502	Rear End Cap - Retro Fitness (2)
LF-045	CLL, CST, TDL, PFT	0017-00101-1772	End Cap Screws (2 per cap)
LF-046	CLL, CST, TDL, PFT	0017-00101-1771	Front Cover Screws (4)
LF-047	CLL, CST, TDL, PFT	0K58-01267-0201	Front End Cap (2)
“	CLL8XXXXX	0K58-01267-0501	Front End Cap - Retro Fitness (2)
LF-048	CLL, CST, TDL, PFT	AK58-00245-0001	Bug Medallion Assembly
LF-049	CLL, CST, TDL, PFT	AK58-00272-0201	Front Cover with Bug Medallion
“	CLL8XXXXX	AK58-00272-0501	Front Cover with Bug Medallion - Retro Fitness
“	CLL, CST, TDL, PFT	AK58-01266-0201	Front Cover only, no Bug

Wiring

DSP Controller Wiring Diagram

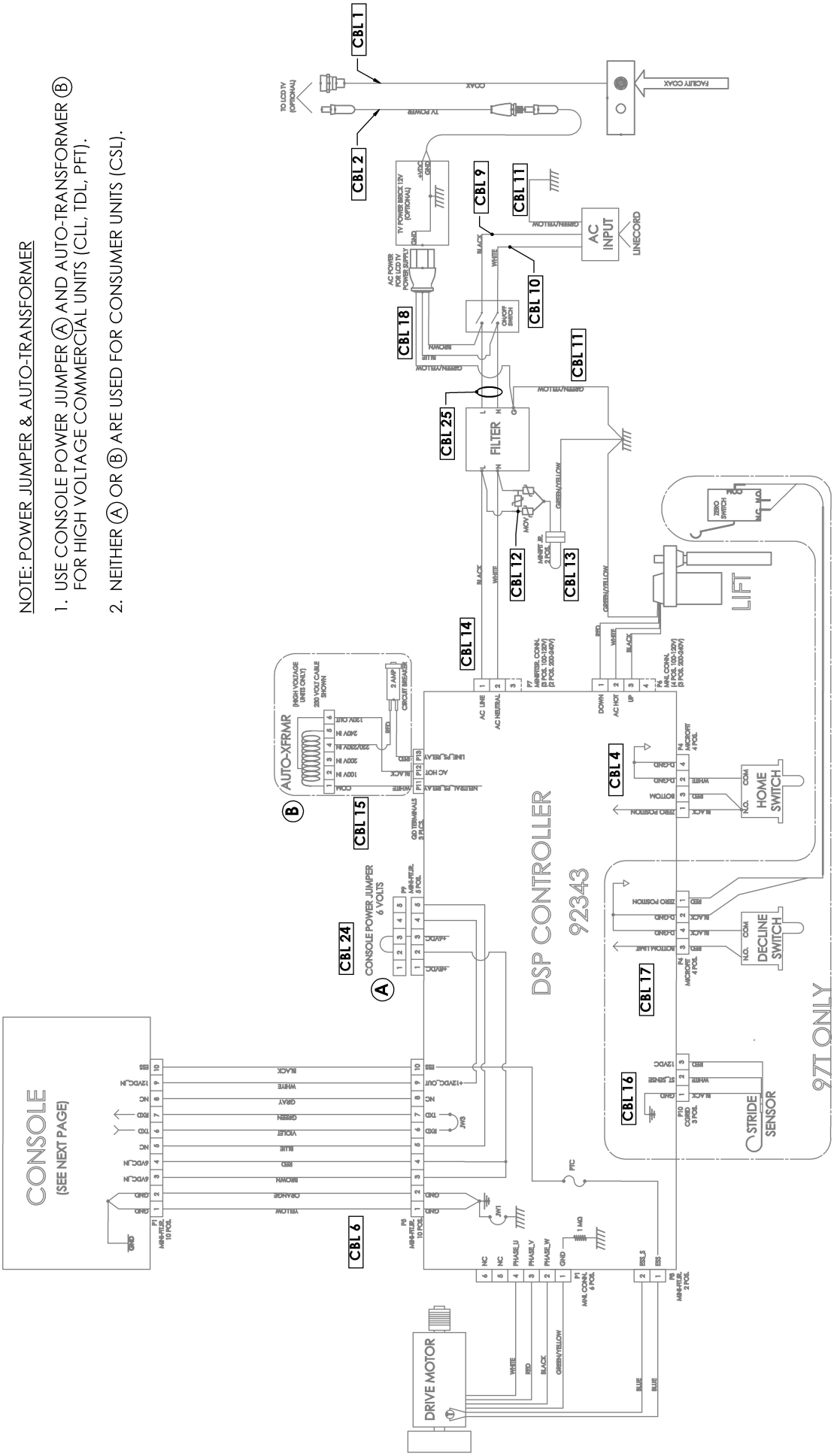

Console Wiring Diagram

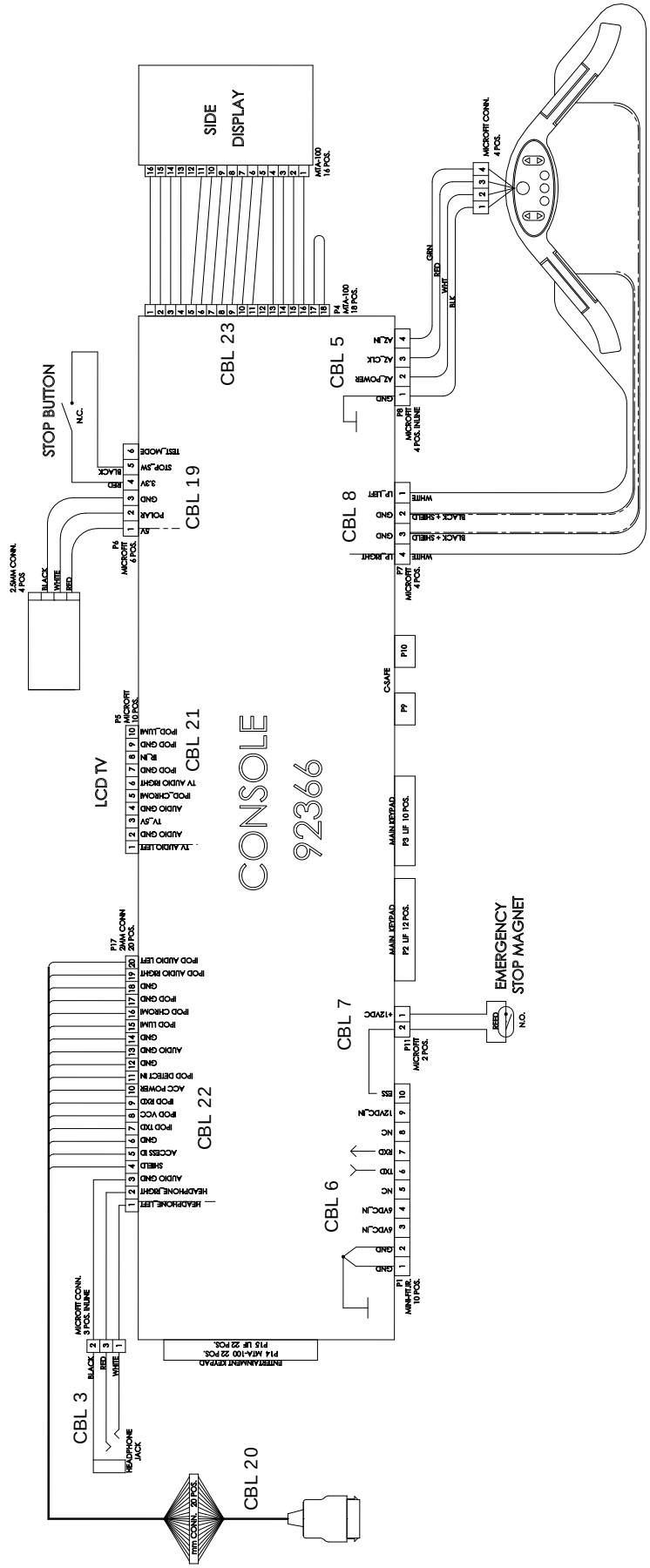

Cable Parts List

Designator	Alpha Code	Part Number	Description
CBL 1	CLL, CSL, TDL, PFT	AK32-0020-0002	CBL-ASSY: COAX
CBL2	CLL, CSL, TDL, PFT	AK32-00078-0001	CBL-ASSY: PWR EXTENSION; TV
CBL 3	CLL, CSL, TDL, PFT	AK86-00025-0201	CBL-ASSY: HEADPHONE JACK
CBL 4	CLL, CSL, TDL, PFT	AK58-00027-0000	CBL-ASSY: HOME SWITCH
CBL 5	CLL, CSL, TDL, PFT	AK58-00032-0000	CBL-ASSY: ACTIVITY ZONE/USER SENSE
CBL 6	CLL, CSL, TDL, PFT	AK58-00034-0001	CBL-ASSY: CONSOLE; PWR; UPR
CBL 7	CLL, CSL, TDL, PFT	AK58-00036-0000	CBL-ASSY: EMERGENCY-STOP
CBL 8	CLL, CSL, TDL, PFT	AK58-00041-0001	CBL-ASSY: H/R SENSORS
CBL 9	CLL, CSL, TDL, PFT	AK58-00081-0000	CBL-ASSY: JUMPER; BLACK
CBL 10	CLL, CSL, TDL, PFT	AK58-00082-0000	CBL-ASSY: JUMPER; WHITE
CBL 11	CLL, CSL, TDL, PFT	AK26-00348-0001	CBL-ASSY: JUMPER; GREEN/YELLOW
CBL 12	CLL, CSL, TDL, PFT	AK58-00224-0001	CBL-ASSY: MOV; FILTER
CBL 13	CLL, CSL, TDL, PFT	AK58-00263-0000	CB;-ASSY: HI-POT JUMPER
CBL 14	CLL, CSL, TDL, PFT	AK58-00520-0000	CBL-ASSY: POWER; 100-120V
“	CLL, CSL, TDL, PFT	AK58-00521-0000	CBL-ASSY: POWER; 200-240V
“	CLL, CSL, TDL, PFT	AK58-00596-0001	CBL-ASSY: POWER; 200-240V, w/FERRITE
CBL 15	CLL, TDL, PFT	AK58-00527-0000	CBL-ASSY: AUTO-ZFRMR - used on high voltage only
CBL 16	TDL	AK58-00560-0000	STRIDE-SENSOR ASSEMBLY
CBL 17	TDL	AK60-00009-0001	CBL-ASSY: ZERO-NEGATIVE SWITCH
CBL 18	CLL, CSL, TDL, PFT	AK65-00081-0001	CBL-ASSY: AC POWER, IEC
CBL 19	CLL, CSL, TDL, PFT	AK69-00154-0000	CBL-ASSY: POLAR/E-STOP
“	CLL, CSL, TDL, PFT	118E-00001-0244	Polar H/R Receiver Board
“	CLL, CSL, TDL, PFT	0K39-01044-0001	Adhesive Tape for Polar Board
CBL 20	CLL, CSL, TDL, PFT	AK86-00001-0201	CBL-ASSY: I-POD, TREAD
CBL 21	CLL, CSL, TDL, PFT	AK86-00002-0001	CBL-ASSY: AUDIO, S-VIDEO
CBL 22	CLL, CSL, TDL, PFT	AK86-00003-0001	CBL-ASSY: CONSOLE, I-POD, TREAD
CBL 23	TDL	AK86-00004-0000	CBL-ASSY: CONSOLE, SIDE
CBL 24*	CLL, TDL, PFT	AK86-00027-0000	CBL-ASSY: POWER JUMPER; 6 VOLT
CBL 25	CLL, CSL, TDL, PFT	AK86-00028-0000	CBL-ASSY: POWER, FILTER

* Used on Commercial High Voltage Only.

Line Cord Parts List

Item	Alpha Code	Part Number	Description
n/a	CLL, TDL	0017-00003-0781	High V US Cord, 8 ft.
n/a	CLL, CSL, TDL	0017-00003-0696	High V CE Continental Cord
n/a	CLL, CSL, TDL	0017-00003-0890	High V CE UK Cord
n/a	CLL, TDL, PFT	0017-00003-0974	Low V US Cord, 8 ft.
n/a	CLL, TDL, PFT	0017-00003-0947	Low V US Cord, 12 ft.
n/a	CSL	0017-00003-0985	Low V US Cord, 12 ft. (See Note)
n/a	CLL, CSL, TDL	0017-00003-0996	High V Australian Cord, 12 ft.
n/a	CLL, TDL, PFT	0017-00003-1065	Line Cord: 120 V, 20 A, US Cord, 45 degree and right angle, optional.
n/a	CLL, TDL, PFT	0017-00003-1075	Line Cord: 220V, 15A, Right Angle.

Note: This is a wired (not plug-in) item.