D4573L – SYNCHRO 700

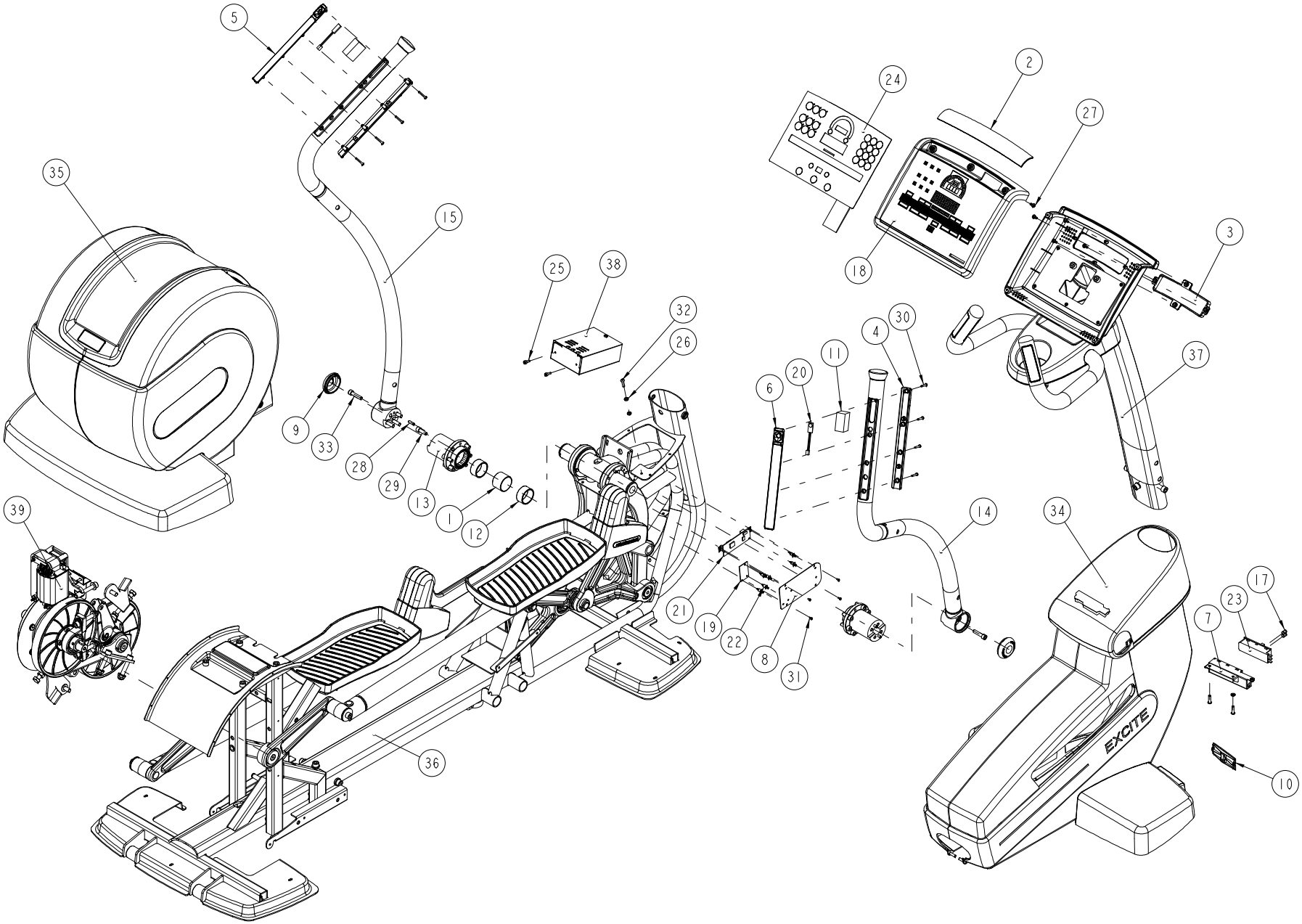

Rif. Ref.	Codice Code	Descrizione	Description	Q.tà Q.ty
1	0B000708AA	Distanziale	Spacer	2
2	0C000533AA	Tappo accessori display	Plug for display	1
3	0C000540AA	Tappo	Plug	1
4	0C000584AA	TOUCH SENSOR inferiore	TOUCH SENSOR lower plate	2
5	0C000951AA	TOUCH SENSOR -	TOUCH SENSOR plate -	1
6	0C000952AA	TOUCH SENSOR +	TOUCH SENSOR plate +	1
7	W0003597AC	Grp schurter	Schurter socket assembly	1
8	0D001701AB	Piatto	Plate	1
9	0G000148-GG	Tappo	Plug	2
10	0G000244	Tappo connettore pedana	Plug for base	1
11	0G1341	Spugna	Sponge	2
12	0K000326AA	Distanziale	Spacer	4
13	0N000258AD-AL	Boccola completa	Complete bushing	2
14	0N000268AD-AL	Impugnatura laterale dx	Side right handle grip	1
15	0N000269AD-AL	Impugnatura laterale sx	Side left handle grip	1
17	0WF020	Fusibile - rapido	Fuse - fast acting	2
18	W0003767AA	Display 700 ARM	Display 700 ARM	1
19	0WQ00241AD	Scheda Hand-Sensor	Hand-Sensor board	1
20	0WQ00261AC	Scheda TOUCH SENSOR	TOUCH SENSOR board	2
21	0WR00678AA	Ricevitore SALUTRON 4000	SALUTRON 4000 receiver	1
22	0WR00476AA	Distanziale schede	Boards clips	6

Rif. Ref.	Codice Code	Descrizione	Description	Q.tà Q.ty
23	0WT005AA	Presa schurter	Schurter socket	1
24	0WT00037AD-(#)	TASTIERA 700	KEYBOARD 700	1
25	0Z175	Vite (VTCEI)	Bolt	2
26	0Z320	Rosetta dentata	Ext. notched washer	3
27	0Z775	Vite autof. (VTBIC) nera	Black self-threading screw	7
28	0ZS00011AA	Spina elastica	Spiral pin	4
29	0ZV00060	Vite (VTCEI)	Bolt	12
30	0ZV00127	Vite autof. (VTBIC)	Self-threading screw	8
31	0ZV00004	Vite (VTCCIC)	Screw	4
32	0ZV00135	Vite (VTBEI)	Bolt	3
33	0ZV00223AA	Vite (VTCEI)	Bolt	8
34		Vedi pagina **6**/10	See page **6**/10	1
35		Vedi pagina **6**/10	See page **6**/10	1
36		Vedi pagina 2/10	See page 2/10	1
37		Vedi pagina 4/10	See page 4/10	1
38	R0004475AB	Scheda freno 65W	Brake Board	1
39		Vedi pagina 7/10	See page 7/10	1

(#)	Complete the code with any language abbreviation from the list below:
	-BR: Portoghese - Portuguese, **-DE**: Tedesco - German, **-ES**: Spagnolo - Spanish, **-FR**: Francese - French, **-IT**: Italiano - Italian, **-JP**: Giapponese - Japanese, **-NL**: Olandese - Dutch, **-UK**: Inglese britannico - UK English, **-US**: Inglese americano - US English

D4573L – SYNCHRO 700

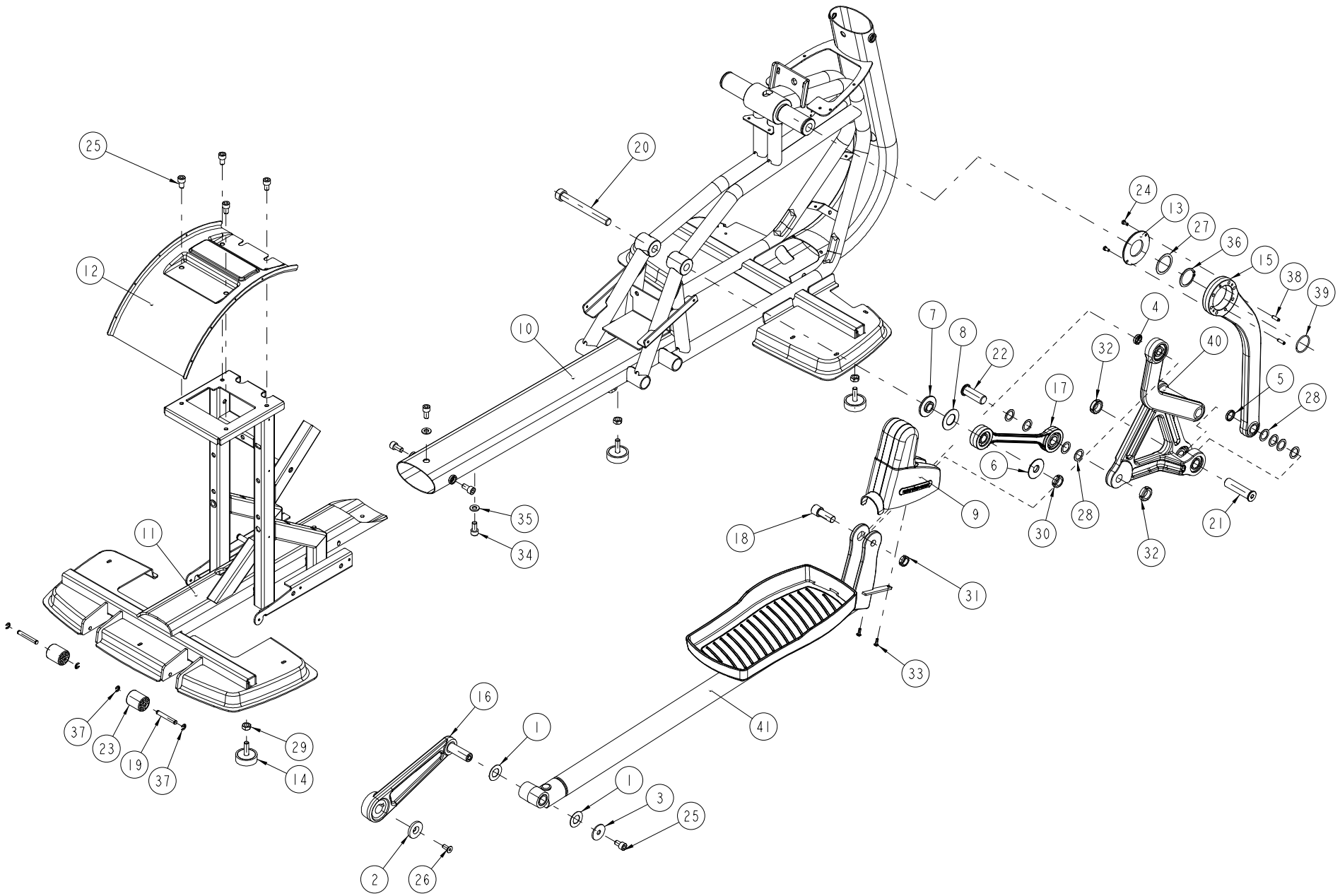

Rif. Ref.	Codice Code	Descrizione	Description	Q.tà Q.ty
1	0B000553AA	Distanziale	Spacer	4
2	0B000567AA	Rosetta svasata	Flared washer	2
3	0B000579AB	Rosetta	Washer	2
4	0B000621AC	Distanziale	Spacer	2
5	0B000623AA	Distanziale	Spacer	2
6	0B000631AA	Distanziale	Spacer	2
7	0B000675AB	Distanziale	Spacer	1
8	0B000810AA	Distanziale	Spacer	2
9	0C000607AA	Cuffiotto leve	Cover casing for lever	2
10	0D001359AD-AL	Telaio anteriore	Front frame	1
11	0D001375AA	Telaio posteriore	Rear frame	1
12	0D001423AA-AL	Lamiera carter	Plate for rear casing	1
13	0D001759AA	Distanziale	Spacer	2
14	0G000418AA	Piedino di registro	Adjusting foot/stop	5
15	0N000275AD	Leva anteriore dx	Right front lever	1
	0N000276AD	Leva anteriore sx	Left front lever	1
16	0N000292AA	Manovella	Rear cranck	2
17	0N000348AA	Leva	Lever	2
18	0P000427AB	Perno	Pin	2
19	0P000433AA	Perno	Pin	2
20	0P000441AA	Perno	Pin	1
21	0P000470AA	Perno	Pin	2

Rif. Ref.	Codice Code	Descrizione	Description	Q.tà Q.ty
22	0P000480AA	Perno	Pin	2
23	0V255	Rullo trasferimento	Moving wheel	2
24	0Z075	Vite (VTE)	Bolt	4
25	0Z111	Vite (VTCEI)	Bolt	6
26	0Z254	Vite (VTSPEI) nera	Black bolt	2
27	0Z372	Anello di spessoramento	Shim ring	2
28	0Z375	Anello di spessoramento	Shim ring	16
29	0Z410	Dado	Nut	5
30	0Z413	Ghiera autobloccante	Self-locking ring nut	1
31	0Z453	Ghiera autobloccante	Self-locking ring nut	2
32	0Z458	Ghiera autobloccante	Self-locking ring nut	4
33	0Z775	Vite autof. (VTBIC) nera	Black self-threading screw	4
34	0Z1035	Vite (VTCEI)	Bolt	4
35	0Z3003	Rosetta	Washer	2
36	0Z543	Anello elastico per alberi	External circlip	2
37	0ZS00058	Anello elastico per alberi	External circlip	4
38	0ZS00011AA	Spina elastica	Spiral pin	4
39	0ZS00088AA	Anello elastico per fori	Internal circlip	2
40	W0001959AA-GG	Leva triangolare dx	Right triangular lever	1
	W0001960AA-GG	Leva triangolare sx	Left triangular lever	2
41		Vedi pagina 3/10	See page 3/10	1

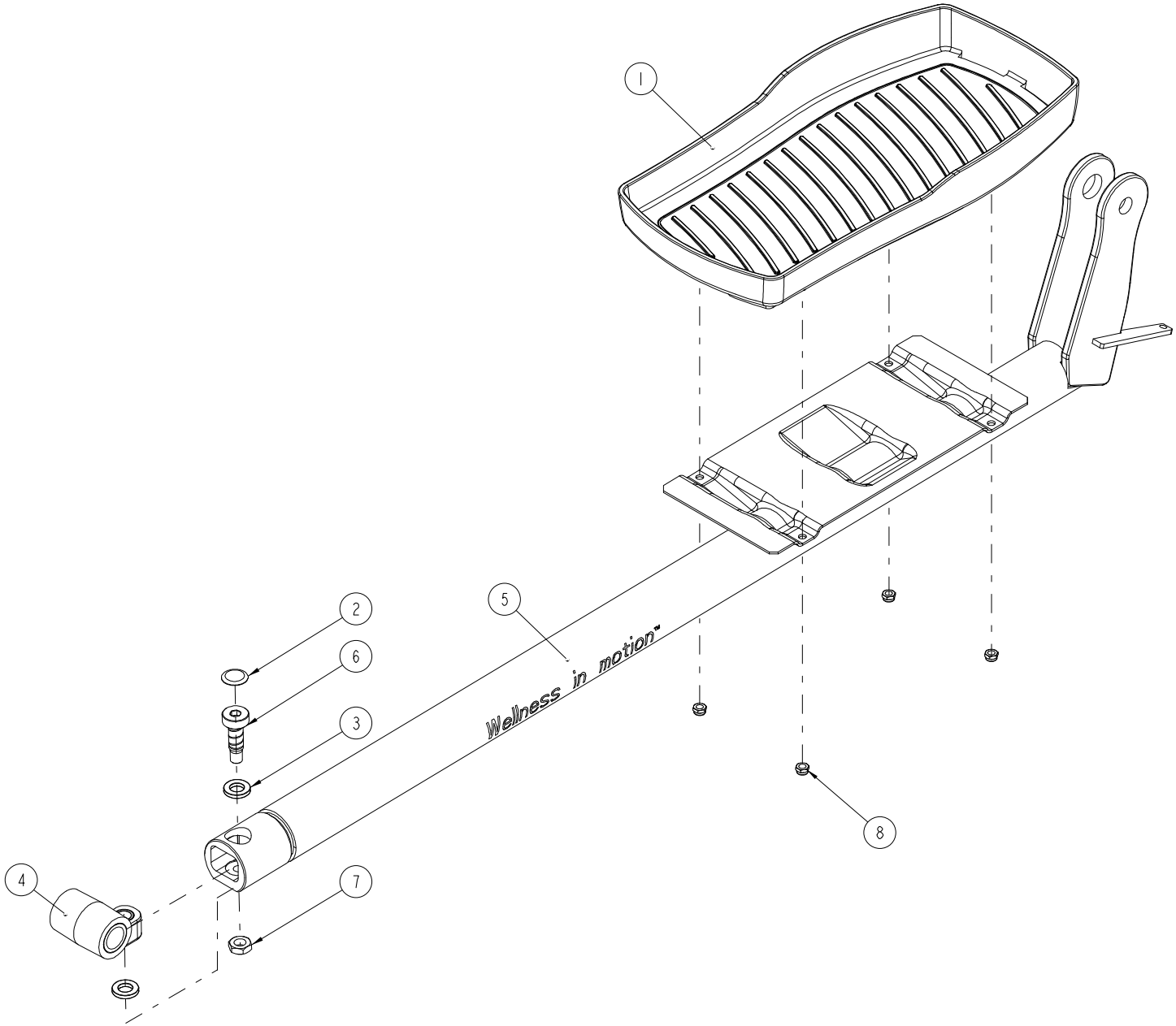
1
2
6
3
4
5
7
8
Wellness in motion™

Rif. Ref.	Codice Code	Descrizione	Description	Q.tà Q.ty
1	R0006603AA-GG	Pedali SYNCHRO EXCITE	SYNCHRO EXCITE pedals	1
2	0G000285	Tappo	Plug	1
3	0G000455AB	Rosetta	Washer	2
4	0N000314AB	Snodo	Joint	1
5	0N000321AD-GG	Leva pedali dx	Right pedal lever	1
	0N000235AE-GG	Leva pedali sx	Left pedal lever	1

Rif. Ref.	Codice Code	Descrizione	Description	Q.tà Q.ty
6	0P000483AC	Perno	Pin	1
7	0Z419	Dado	Nut	1
8	0Z436	Dado autobloccante	Self-locking nut	4

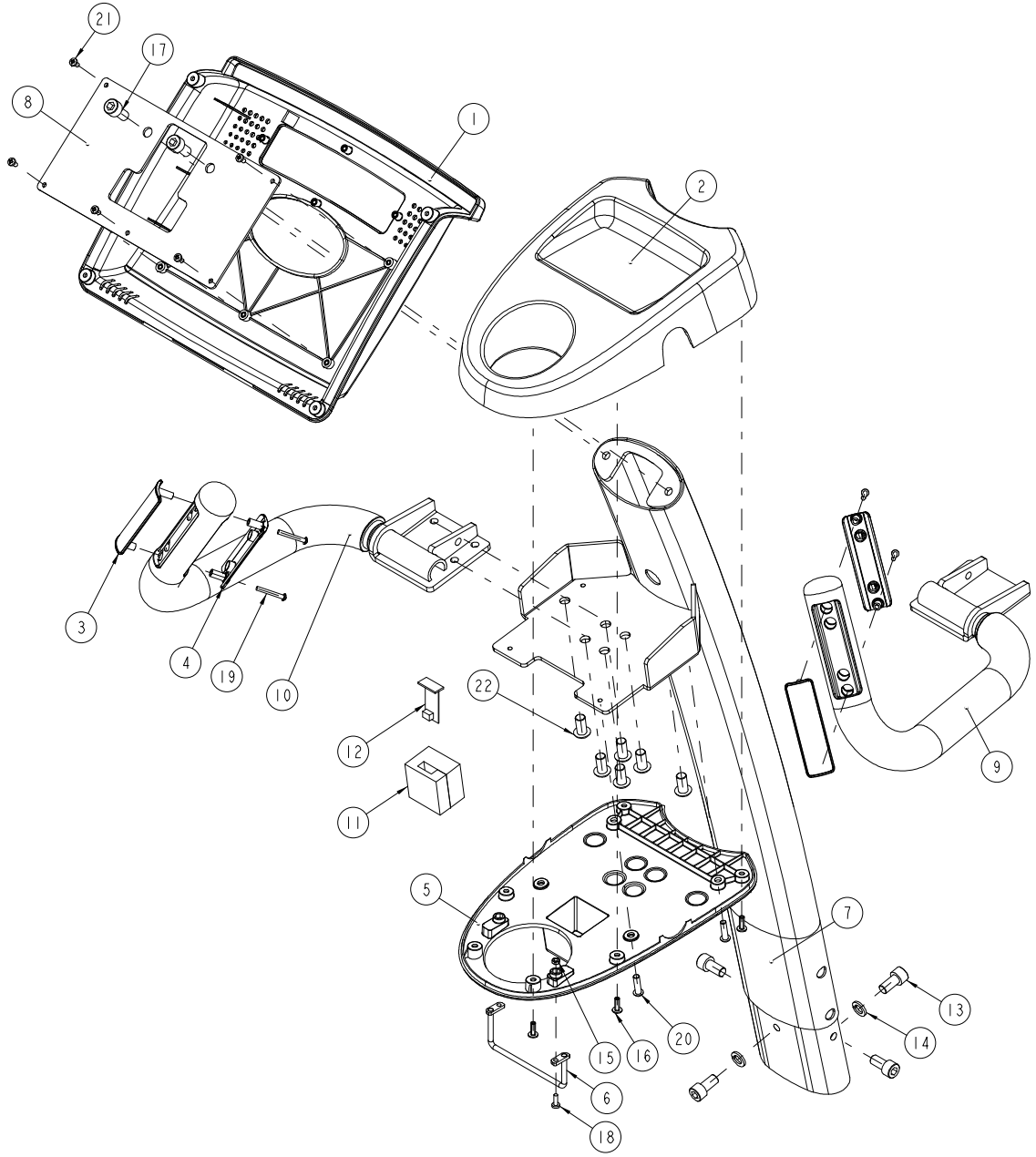
21
17
8
1
2
3
4
19
10
22
12
11
9
5
7
13
14
20
15
16
6
18

Rif. Ref.	Codice Code	Descrizione	Description	Q.tà Q.ty
1	0C000532AA	Guscio inferiore display	Rear covering for display	1
2	0C000578AA	Portaborraccia	Water bottle support	1
3	0C000580AA-GG	HS superiore	Hand sensor upper plate	2
4	0C000581AA-GG	HS inferiore	Hand sensor lower plate	2
5	0C000586AA	Supporto portaborraccia	Water bottle lower support	1
6	0D001312AC-GG	Gancio portaborraccia	Water bottle support	1
7	0D001376AA-AL	Montante	Upright frame	1
8	0D001839AB	Lamiera sup. guscio inf.	Rear covering support	1
9	0D001445AA	Impugnatura dx	Right handle grip	1
10	0D001446AA	Impugnatura sx	Left handle grip	1
11	0G001036AA	Spugna	Sponge	1

Rif. Ref.	Codice Code	Descrizione	Description	Q.tà Q.ty
12	0WR00285	Ricevitore POLAR HFU	POLAR HFU receiver	1
13	0Z112	Vite (VTCEI)	Bolt	4
14	0Z323	Rosetta elastica	Locking washer	2
15	0Z424	Dado	Nut	2
16	0Z775	Vite autof. (VTBIC) nera	Black self-threading screw	6
17	0Z1035	Vite (VTCEI)	Bolt	2
18	0Z733	Vite (VTCCIC)	Screw	2
19	0ZV00127	Vite autof. (VTBIC)	Self-threading screw	4
20	0ZV00135	Vite (VTBEI)	Bolt	4
21	0ZV00152AA	Vite (VTCCIC)	Screw	5
22	0ZV00169AA	Vite (VTBEI)	Bolt	6

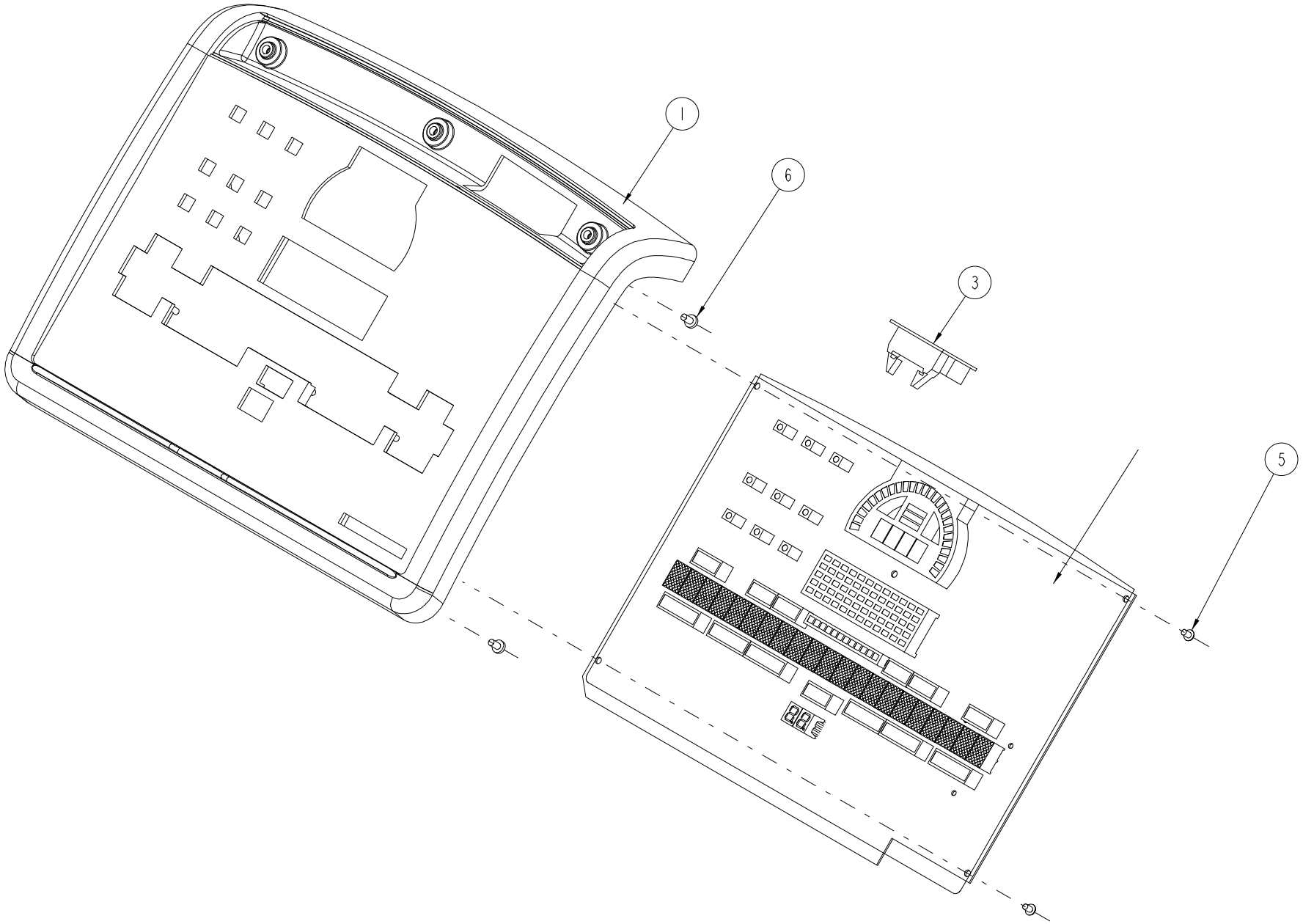
1
6
3
5

Rif. Ref.	Codice Code	Descrizione	Description	Q.tà Q.ty
1	0C000531AA-GV	Guscio display 700	Upper shell for display 700	1
3	0WQ00060AA	Scheda RJ45	RJ45 board	1
5	0Z7018	Vite autof. (VTBIC)	Self-threading screw	5

Rif. Ref.	Codice Code	Descrizione	Description	Q.tà Q.ty
6	0ZV00152AA	Vite (VTCCIC)	Screw	4

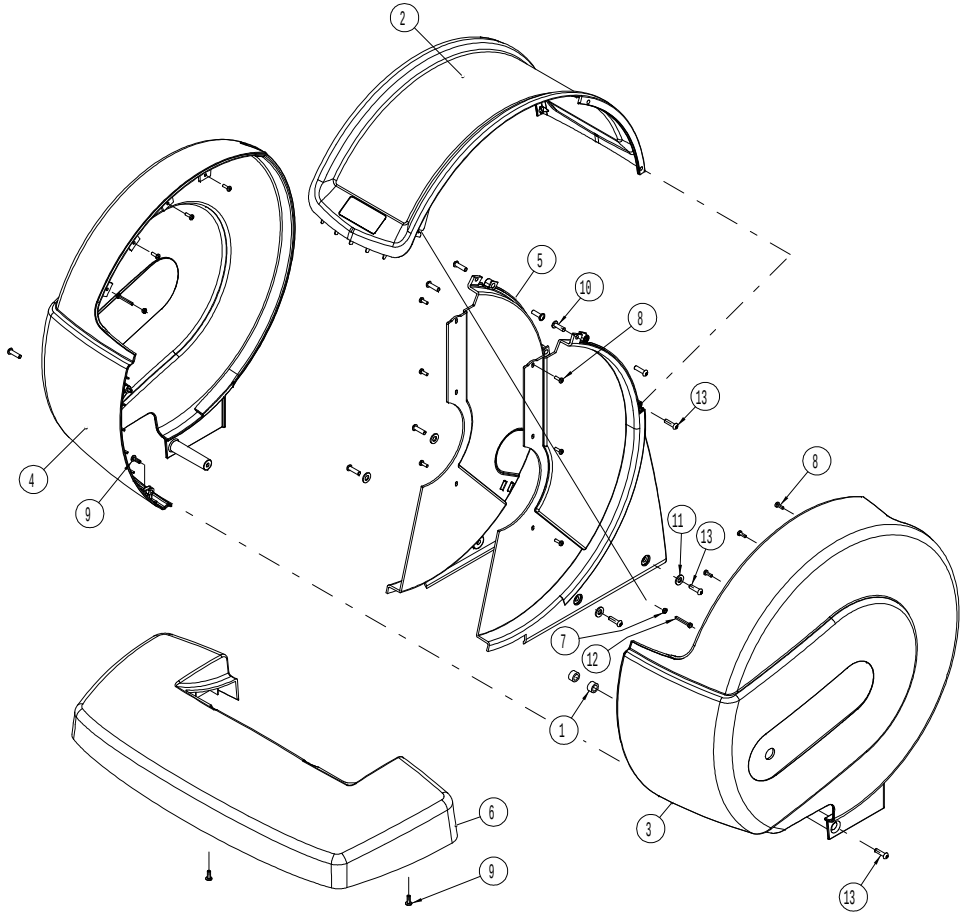
2
5
10
8
13
4
9
8
11
13
7
12
1
3
6
9
13

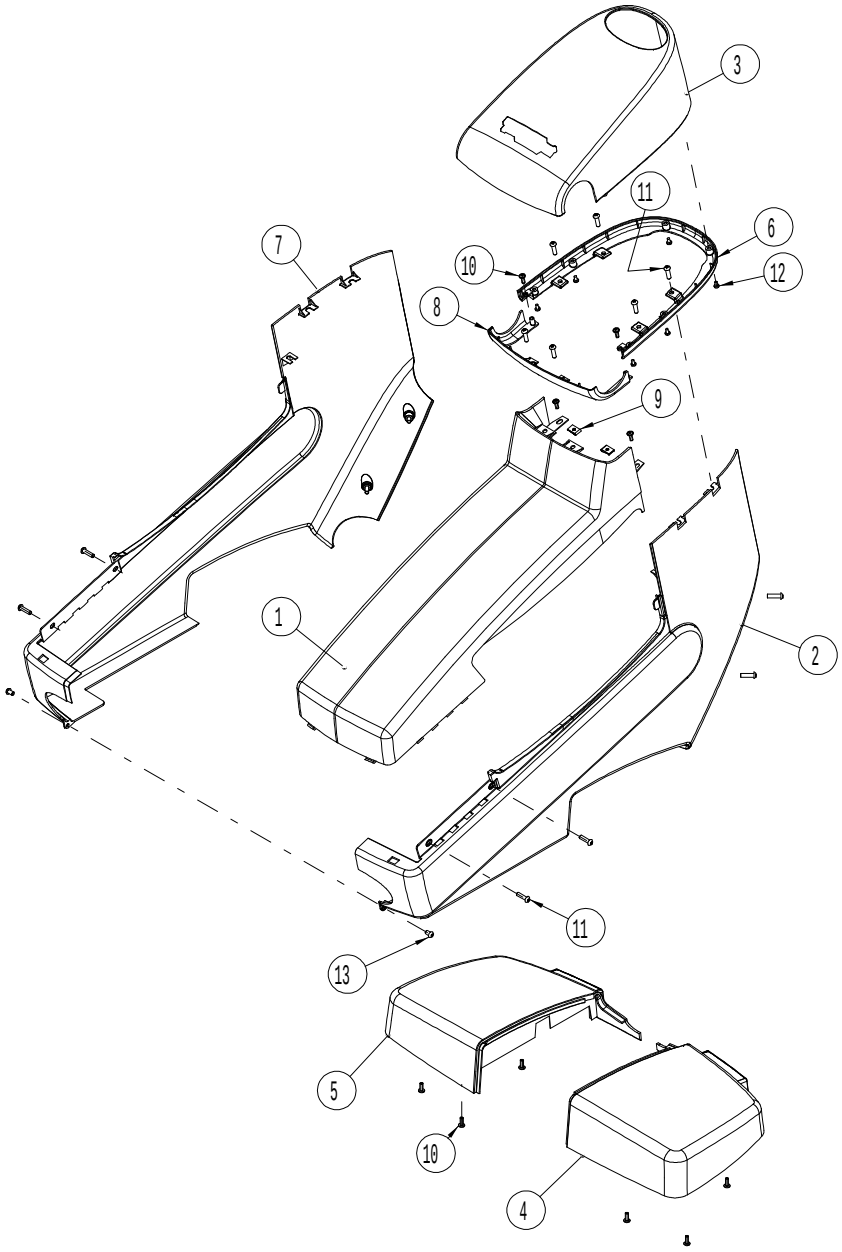
3
11
6
7
10
12
8
9
1
2
11
13
5
10
4

Rif. Ref.	Codice Code	Descrizione	Description	Q.tà Q.ty
1	0B000530AA	Distanziale	Spacer	2
2	0C000542AB	Copertura per carter posteriore	Cover for rear casing	1
3	0C000543AB-G	Carter posteriore dx	Rear right casing	1
4	0C000544AB-G	Carter posteriore sx	Rear left casing	1
5	0C000620AC	Carter centrale	Central casing	1
6	0D001432AC-GG	Pedana posteriore	Rear footboard	1
7	0Z424	Dado	Nut	2
8	0Z733	Vite (VTCCIC)	Screw	12
9	0Z775	Vite autof. (VTBIC) nera	Black self-threading screw	5
10	0Z000151AA	Vite autof. (VTBIC)	Self-threading screw	2
11	0ZR00015	Rosetta	Washer	4
12	0ZV00123	Vite (VTE)	Bolt	2
13	0ZV00135	Vite (VTBEI)	Bolt	10

Rif. Ref.	Codice Code	Descrizione	Description	Q.tà Q.ty
1	0C000553AB-G	Carter superiore	Upper casing	1
2	0C000554AB-G	Carter anteriore dx	Front right casing	1
3	0C000555AA	Cuffiotto	Cover casing	1
4	0C000556AB-GG	Pedana anteriore dx	Front right footboard	1
5	0C000557AB-GG	Pedana anteriore sx	Front left footboard	1
6	0C000558AA	Carter	Casing	1
7	0C000559AB-G	Carter anteriore sx	Front left casing	1
8	0C000566AB-GG	Carter	Casing	1
9	0Z731	Piastrina vite autof.	Threaded plate	2
10	0Z775	Vite autof. (VTBIC) nera	Black self-threading screw	10
11	0ZV00135	Vite (VTBEI)	Bolt	14
12	0ZV00152AA	Vite (VTCCIC)	Screw	6
13	0ZV00181AA	Vite (VTBEI)	Bolt	2

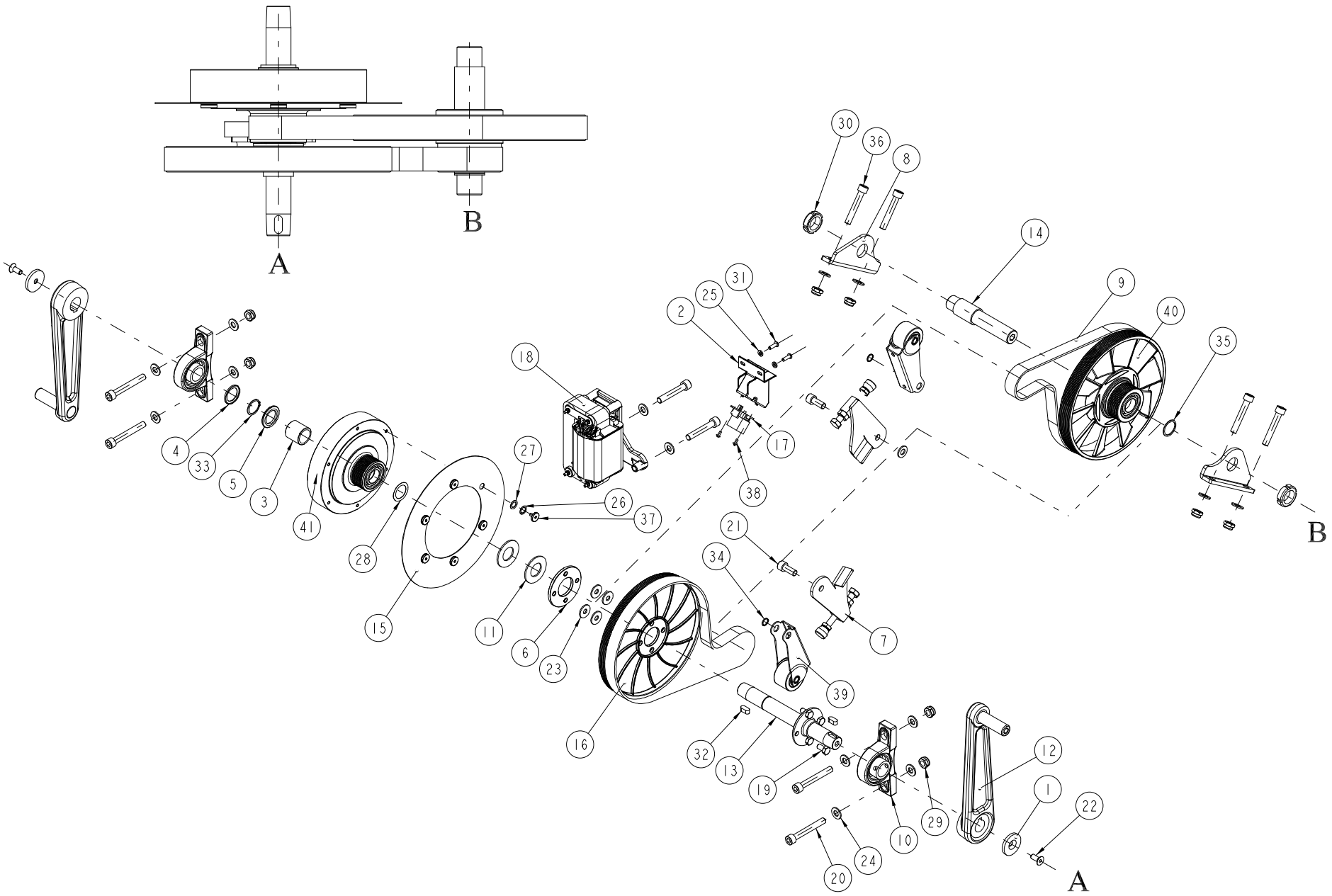
A
B
30
36
8
14
9
40
35
31
25
2
18
17
38
27
26
37
4
33
5
3
41
28
15
11
6
23
16
21
34
7
39
32
13
19
12
1
22
29
10
24
20
A
B

Rif. Ref.	Codice Code	Descrizione	Description	Q.tà Q.ty
1	0B000567AA	Rosetta svasata	Flared washer	2
2	0B000606AA	Supporto	Support	2
3	0B000999AA	Boccola	Bushing	1
4*	0B001000AB	Distanziale	Spacer	1
5	0B001001AB	Flangia	Flange	1
6	0B001002AA	Flangia	Flange	1
7	W0003658AC	Spintore	Pusher	2
8	0D001712AA	Lamiera	Plate	2
9	0K000264AA	Cinghia	Belt	2
10	0K402	Cuscinetto con supporto	Pillow block bearing	2
11	0M000190AA	Molla a tazza	Flat spring	2
12	0N000292AA	Manovella	Rear cranck	2
13	R0005605AA	Kit albero primario	Primary shaft assembly	1
14	0P000498AA	Albero secondario	Secondary shaft	1
15	0U000164AA	Disco rame	Copper disk	1
16	0U000211AA	Puleggia	Pulley	1
17	0WR00244	Sensore velocità	Speed sensor	1
18	0WR00496AA	Elettromagnete	Solenoid assembly	1
19	0Z056	Vite (VTE)	Bolt	4
20	0Z108	Vite (VTCEI)	Bolt	4
21	0Z125	Vite (VTCEI)	Bolt	2
22	0Z254	Vite (VTSPEI) nera	Black bolt	2
23	0Z305	Rosetta	Washer	4
24	0Z306	Rosetta	Washer	15

Rif. Ref.	Codice Code	Descrizione	Description	Q.tà Q.ty
25	0Z328	Rosetta dentata	Ext. notched washer	2
26	0Z350	Rosetta ondulata	Locking washer	6
27	0Z396	Anello di spessoramento	Shim ring	6
28	0Z399	Anello di spessoramento	Shim ring	1
29	0Z415	Dado autobloccante	Self-locking nut	8
30	0Z452	Ghiera autobloccante	Self-locking ring nut	2
31	0Z718	Vite (VTBEI) nera	Black bolt	2
32	0Z740	Linguetta	Fixed key	2
33	0Z540	Anello elastico per alberi	External circlip	1
34	0Z584	Anello elastico per alberi	External circlip	2
35	0Z399	Anello di spessoramento	Shim ring	1
36	0ZV00107	Vite (VTCEI)	Bolt	6
37	0ZV00134AA	Vite fissaggio disco rame	Copper disk fixing screw	6
38	0ZV00136AA	Vite autof. (VTBIC)	Self-threading screw	2
39	H0002255AB	Tendicinghia	Belt tensioner	2
40	H0002585AA	Puleggia	Pulley	1
41	R0002584AA	Volano	Flywheel	1

*	Warning - Note
	For machines up to the following S.N., you have to use the code: Per machine fino ai seguenti S.N., si deve usare il codice:
	D4553L080000106 / D4554L08000128 / D4573L08000152 / D4574L08000320 / D4573E08000030 / D4573I08000298
	0B001000AA

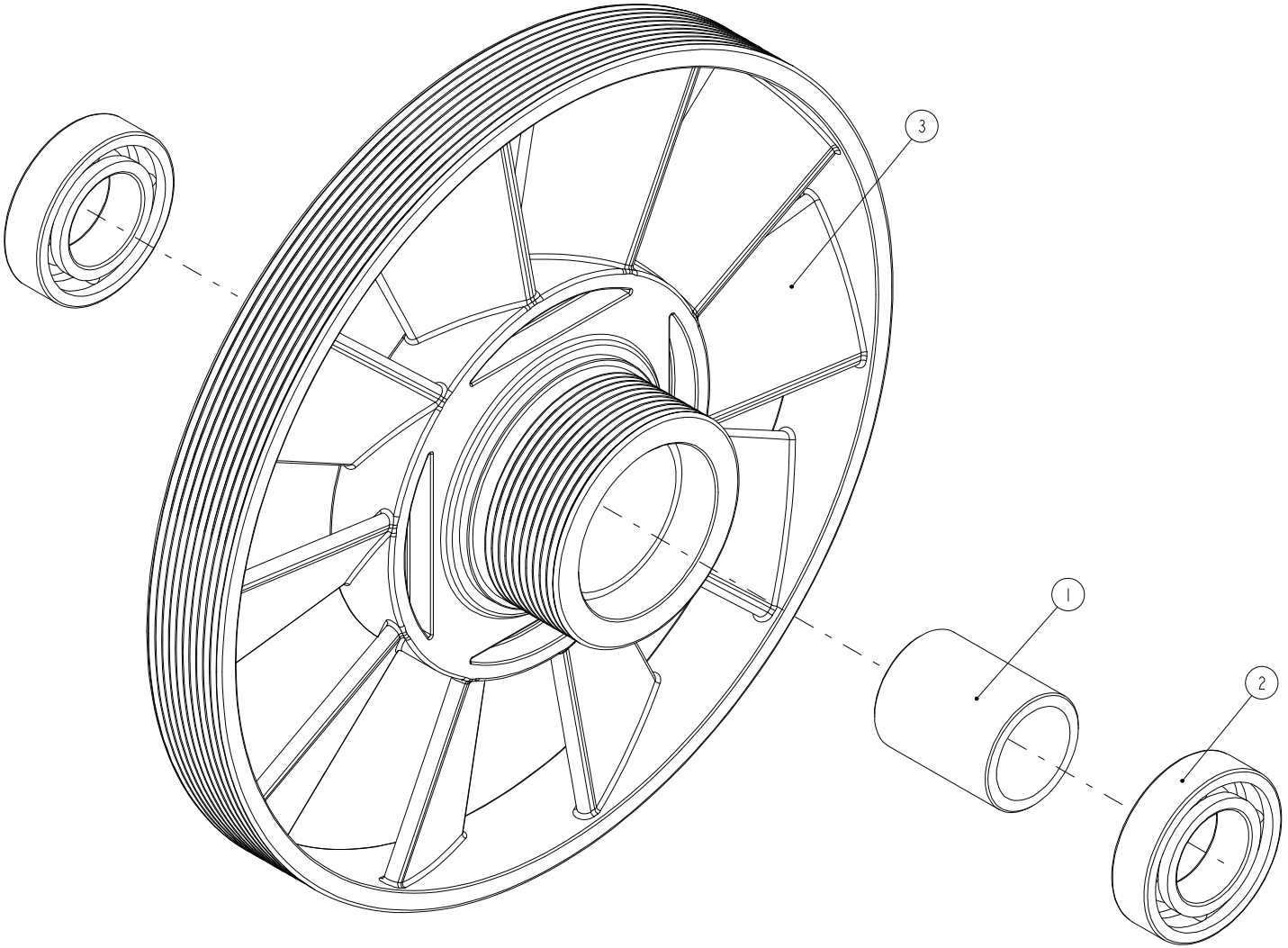

H0002585AA

Rif. Ref.	Codice Code	Descrizione	Description	Q.tà Q.ty
1	0B000671AD	Boccola	Bushing	1
2	0K000347AA	Cuscinetto	Bearing	2

Rif. Ref.	Codice Code	Descrizione	Description	Q.tà Q.ty
3	0U000205AA	Puleggia	Pulley	1

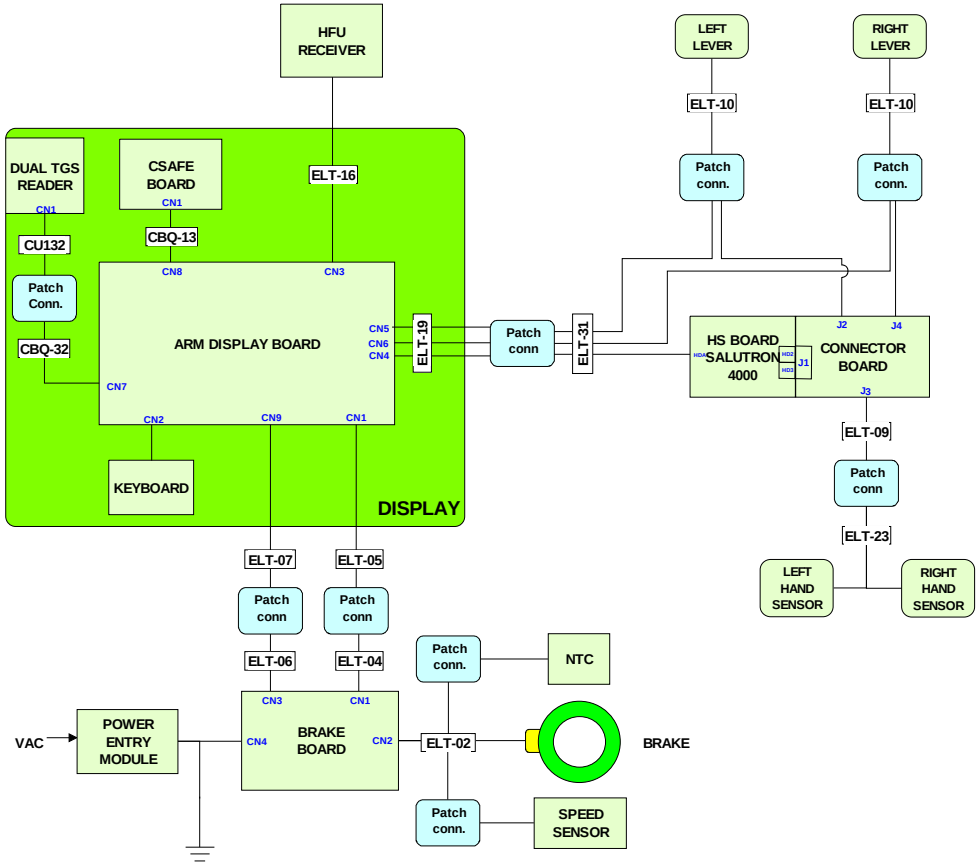
HFU RECEIVER
LEFT LEVER
RIGHT LEVER
ELT-10
ELT-10
Patch conn.
Patch conn.
DUAL TGS READER
CN1
CSAFE BOARD
CN1
ELT-16
CU132
CBQ-13
CN8
CN3
Patch Conn.
CBQ-32
ARM DISPLAY BOARD
CN5
CN6
CN4
ELT-19
Patch conn
ELT-31
HS BOARD SALUTRON 4000
J2
J4
CONNECTOR BOARD
J1
J3
CN7
CN2
CN9
CN1
KEYBOARD
DISPLAY
ELT-09
Patch conn
ELT-23
LEFT HAND SENSOR
RIGHT HAND SENSOR
ELT-07
ELT-05
Patch conn
Patch conn
ELT-06
ELT-04
Patch conn.
NTC
VAC
POWER ENTRY MODULE
CN3
CN1
CN4
BRAKE BOARD
CN2
ELT-02
BRAKE
Patch conn.
SPEED SENSOR

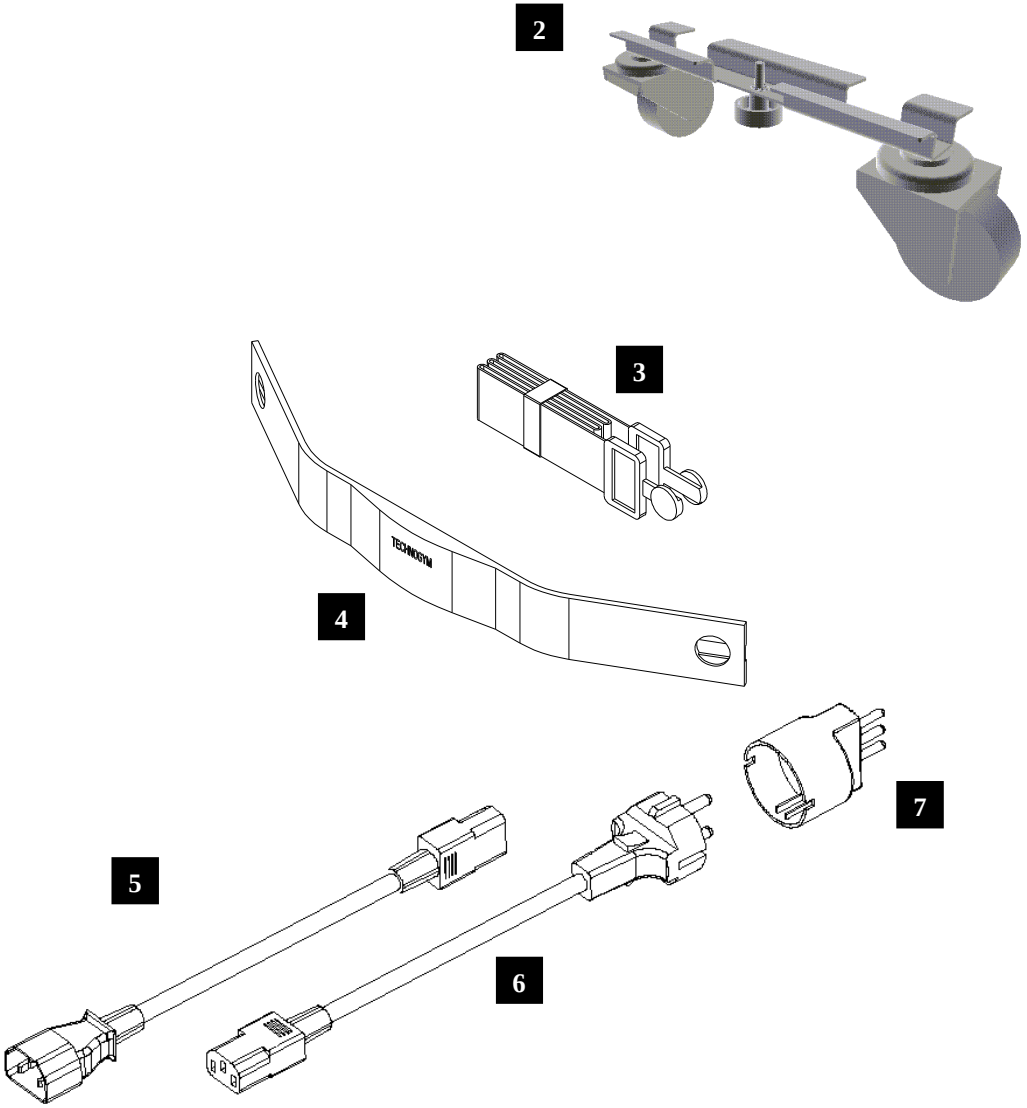
2
3
4
5
6
7

Riferimento Reference	Codice Code
CBQ-13	0WC00386AC
CBQ-32	0WC00392AB
CU132	0WCU0132AA
ELT-02	0WC00504AB
ELT-04	0WC00506AB
ELT-05	0WC00507AB
ELT-06	0WC00508AB
ELT-07	0WC00509AB
ELT-09	0WC00511AB
ELT-10	0WC00512AC
ELT-16	0WC00518AC
ELT-19*	0WC00521AC (10 pins patch connector)
ELT-23	0WC00525AB
ELT-31*	0WC00582AD (10 pins patch connector

	NOTA - WARNING
*	Per macchine fino al numero di serie D4573L04000620, si deve utilizzare il cavo con connettore volante 12 pin. For machine up to serial number D4573L04000620, you have to use the cable with 12 pins patch connector.
	0WC00521AB (ELT-19) 0WC00582AC (ELT-31)

Rif. Ref.	Codice Code	Descrizione	Description	Q.tà Q.ty
2	A0000152AA	Carrello	Transportation device for EXC	1
3	E0000009	Fascia elastica HR POLAR mod.T	Elastic strap	1
4	E0000013	Fascia trasmettitore HR POLAR	Non coded transmitter	1
5	0WC006	Cavo ponte alim/ne rete (EUR)	Daisy chain cable (EUR)	1
	0WC116U	Cavo ponte alim/ne rete (USA)	Daisy chain cable (USA)	1
6	0WC005	Cavo alim/ne rete (EUR)	Mains power cable (EUR)	1
	0WC00282	Cavo alim/ne rete 10A 125V (USA)	Mains power cable 10A (USA)	1
7	0WC101	Riduzione tedesca 10A	Plug adaptor 10A	1

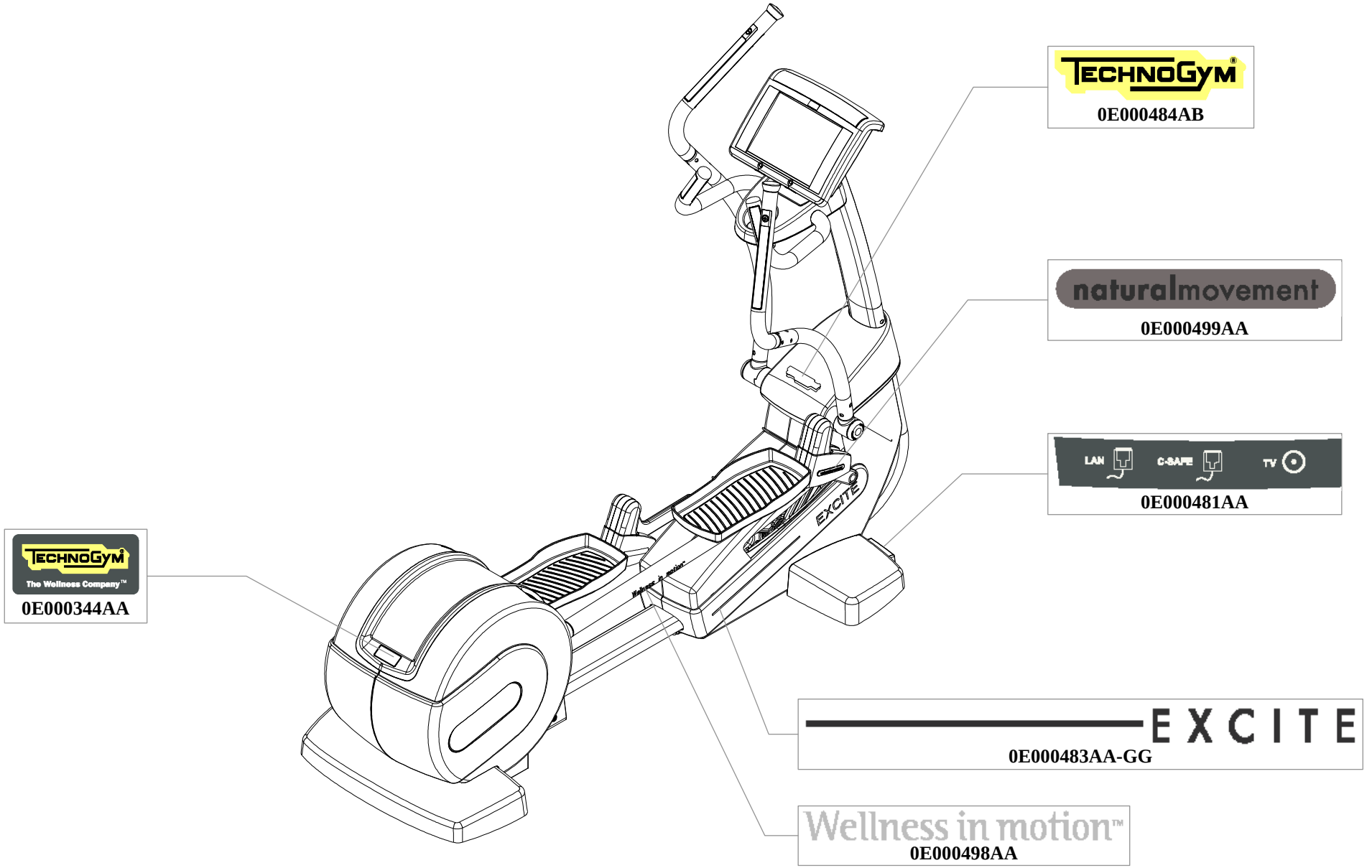
TECHNOGYM
0E000484AB
naturalmovement
0E000499AA
LAN
C-SAFE
TV
0E000481AA
TECHNOGYM
The Wellness Company™
0E000344AA
EXCITE
0E000483AA-GG
Wellness in motion™
0E000498AA

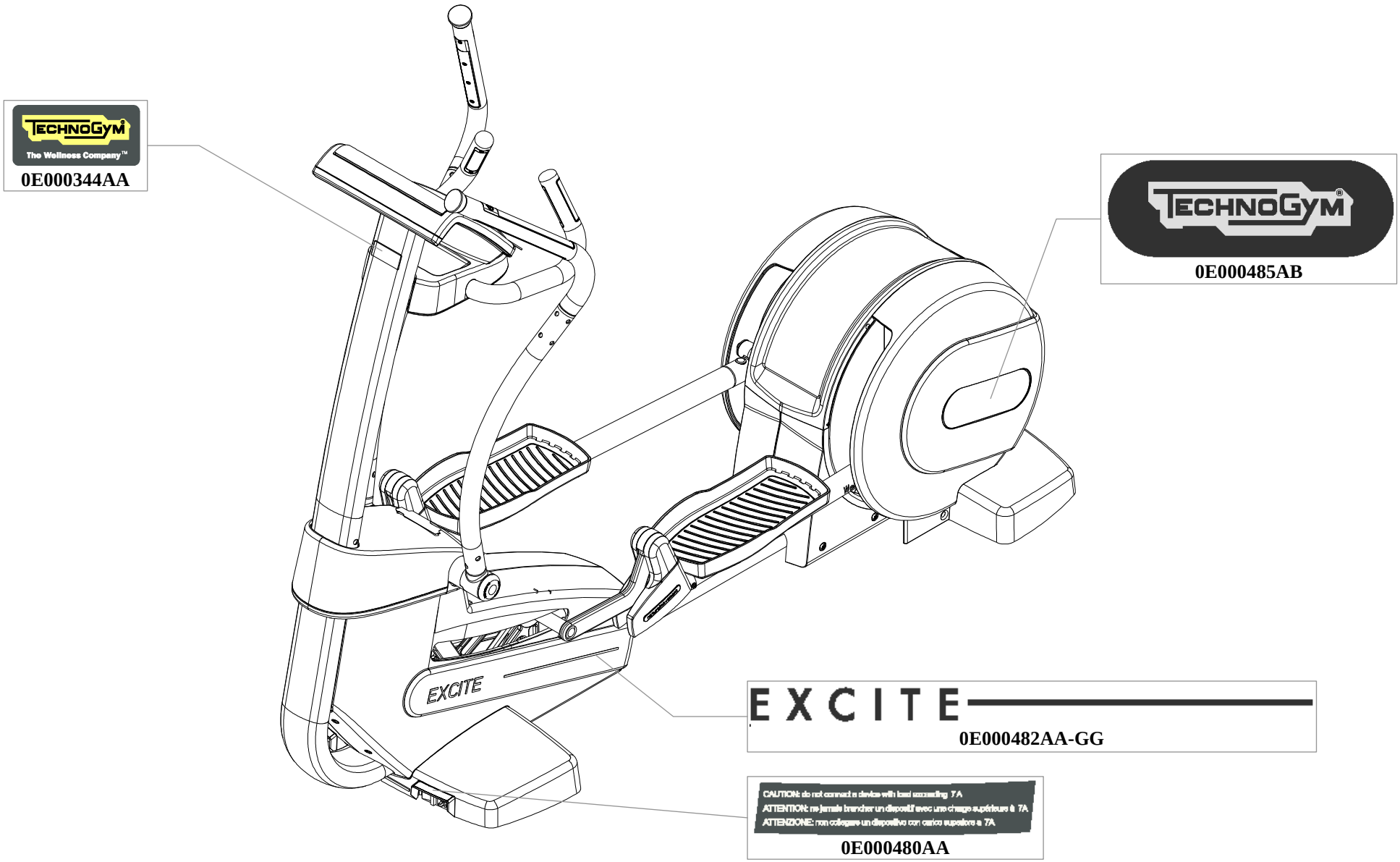
TECHNOGYM
The Wellness Company™
0E000344AA
TECHNOGYM
0E000485AB
EXCITE
EXCITE
0E000482AA-GG
CAUTION: do not connect a device with load exceeding 7A
ATTENTION: ne jamais brancher un dispositif avec une charge supérieure à 7A
ATTENZIONE: non collegare un dispositivo con carico superiore a 7A
0E000480AA