D4553L – SYNCHRO 500

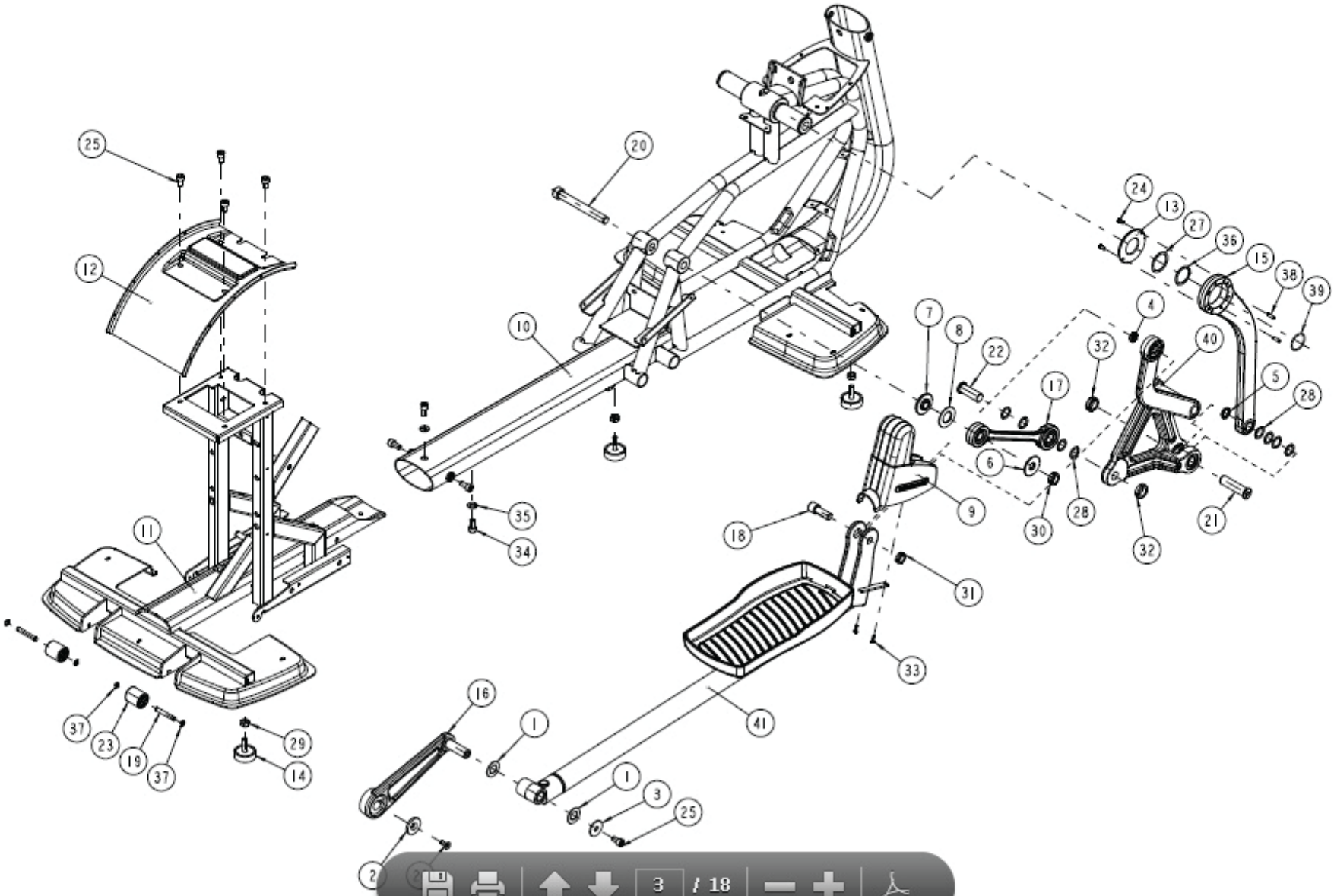

Unknown Zone | Protected Mode: Off

D4553L – SYNCHRO 500

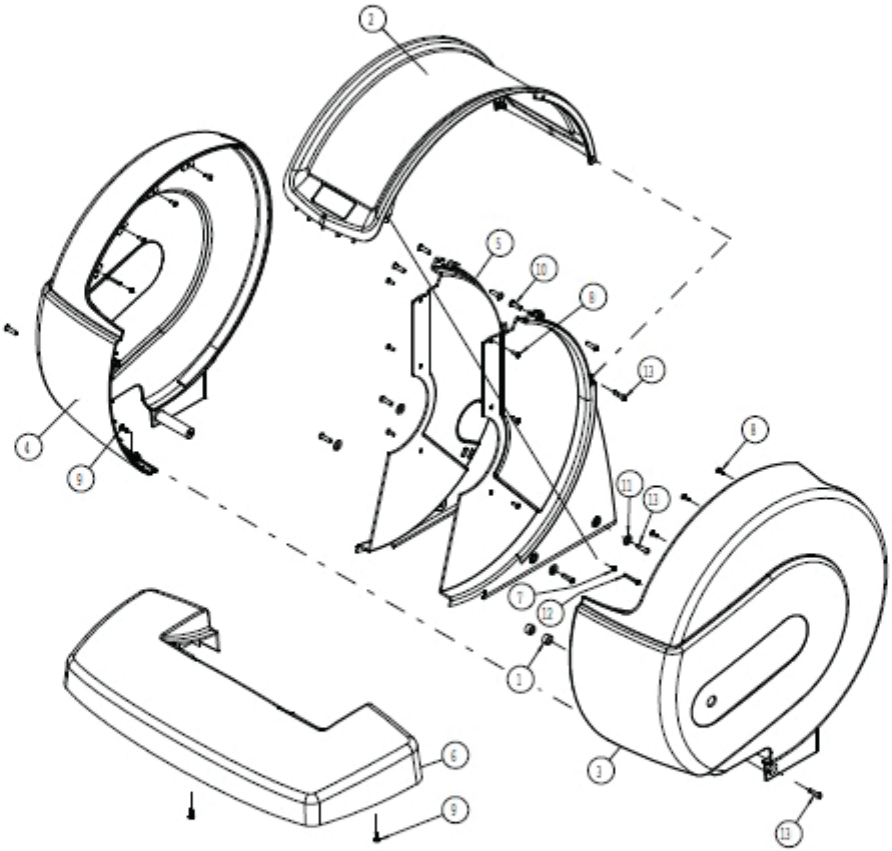

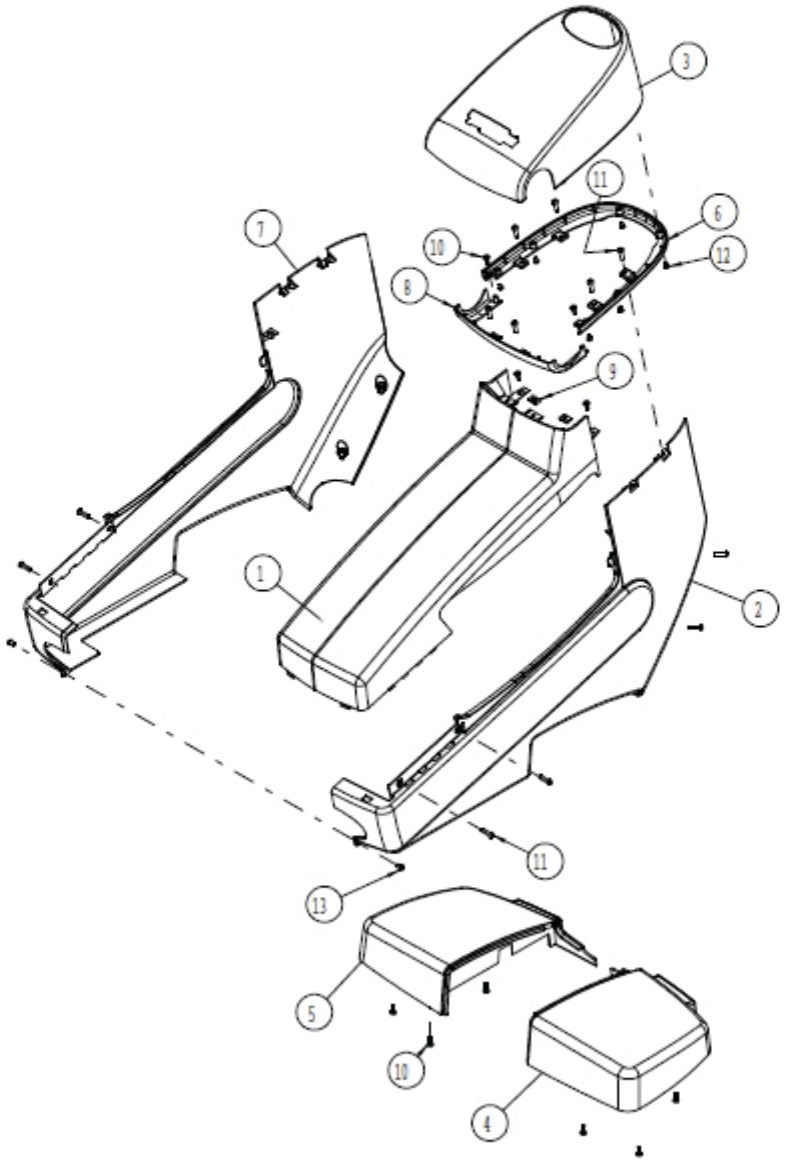

Unknown Zone | Protected Mode: Off